INDIANA DEPARTMENT OF TRANSPORTATION

100 North Senate Avenue
Room N925 CM
Indianapolis, Indiana 46204

PHONE: (317) 232-5502
FAX: (317) 232-5551

Eric Holcomb, Governor
Joe McGuinness, Commissioner

FINAL DRAFT MINUTES

December 17, 2020 Standards Committee Meeting

(Changes to the Agenda by the Action of the Committee shown as highlighted in yellow)

FINAL DRAFT MINUTES

January 7, 2021

TO: Standards Committee

FROM: Scott Trammell, Secretary

RE: Minutes from the December 17, 2020 Standards Committee Meeting

The Standards Committee was called to order by Mr. Pankow, Chair, at 09:00 a.m. on December 17, 2020, virtually via *Teams* (Microsoft application). The meeting was adjourned at 11:47 a.m.

The following committee members were in a virtual attendance:

Gregory Pankow, Chairman, Director, Construction Management
Dan Stickney*, Contract Administration Division
Dave Boruff, Traffic Engineering
Peter White**, Bridge Design Division
Joseph Novak, Construction Management
Kumar Dave, Pavement Engineering, Highway Design
Jim Reilman, Materials and Tests Division
Michael Koch, District Construction, Fort Wayne District
Elena Veksler, Highway Design and Technical Support
Kurt Pelz, Construction Technical Support
**Proxy for* John Wooden
***Proxy for* Mark Orton

Also, virtual presence was captured by *Microsoft Teams* of the following:

Duncan, Thomas, FHWA
Duncan, Steve, INDOT
Osborn, Dan, ICI
Susong, John, Rinker Materials
Leckie, John, ACPA
Beeson, Matt, INDOT
Pfeiffer, Nate, INDOT
Podorvanova, Lana, INDOT
Smutzer, Katherine, INDOT
Trammell, Scott, INDOT
Harris, Tom, INDOT
Cosenza, Nicholas, INDOT

Blanchard, Jacob, INDOT
Corrice, Zachariah, INDOT
Fisher, Steve, INDOT
Craig, Patrick, INDOT
McNutt, Donald, guest
Rogers, Joseph, guest
Frederick, Jared, INDOT
Nelson, Mike, INDOT
Patterson, Patrick, INDOT
Siddiki, Nayyar, INDOT
McCoy, Dan, INDOT
Greg, Allen, guest
Smart, Steve, guest

The following items were discussed:

A. GENERAL BUSINESS ITEMS

OLD BUSINESS

(No items were listed)

NEW BUSINESS

1. Approval of the Minutes from the November 19, 2020 meeting

DISCUSSION: Mr. Pankow requested a motion to approve the Minutes from the November 19, 2020 meeting.

Motion: Mr. Novak
Second: Mr. Boruff
Ayes: 9
Nays: 0

ACTION: PASSED AS SUBMITTED

B. CONCEPTUAL PROPOSAL ITEMS

OLD BUSINESS

(No items were listed)

NEW BUSINESS

(No items on this agenda)

C. STANDARD SPECIFICATIONS, SPECIAL PROVISIONS AND STANDARD DRAWINGS PROPOSED ITEMS

OLD BUSINESS

FINAL DRAFT MINUTES

Item No. 6 (from November 19, 2020) Mr. Reilman pg 5

2020 Standard Specifications:
[proposed new]

SECTION 218	*QC/QA SOIL EMBANKMENT AND QC/QA SUBGRADE*

ACTION: WITHDRAWN

Item No. 1 (from May 21, 2020) Mr. Reilman pg 12

2020 Standard Specifications:

109.05.1*(g)*	*Mandrel Testing of Pipe*
715.08	~~Blank~~*Backfilling*
715.09	~~Backfilling~~*Quality Adjustments*
715.14	Basis of Payment

ACTION: WITHDRAWN

NEW BUSINESS

Item No. 1 (2020 SS) Mr. Reilman pg 20

Recurring Special Provision:

619-B-312	PAINTING BRIDGE STEEL

ACTION: PASSED AS SUBMITTED

Item No. 2 (2020 SS) Mr. Reilman pg 39

2020 Standard Specifications:
[proposed new]

SECTION 509	*PORTLAND CEMENT CONCRETE PAVEMENT, PCCP, JOINT REPAIR*
901.01(d)	*Rapid Hardening Hydraulic Cement*

Standard Drawings:
[proposed new]

E 509-CCJR-01	*JOINT REPAIR INDEX AND GENERAL NOTES*
E 509-CCJR-02	*LONGITUDINAL JOINT REPAIR, PARTIAL DEPTH*
E 509-CCJR-03	*TRANSVERSE JOINT REPAIR, PARTIAL DEPTH*
E 509-CCJR-04	*JOINT REPAIR, BOTTOM-HALF*

ACTION: PASSED AS REVISED

FINAL DRAFT MINUTES

Item No. 3 (2020 SS) Mr. Reilman pg 64

2020 Standard Specifications:

507.05	PCCP Patching
507.09	Method of Measurement
507.10	Basis of Payment

ACTION: PASSED AS SUBMITTED

Item No. 4 (2020 SS) Mr. Reilman pg 70

2020 Standard Specifications:

703.06	Placing and Fastening

ACTION: PASSED AS REVISED

Item No. 5 (2020 SS) Mr. Orton pg 75

Standard Drawings:

E 724-BSSJ-08	EXPANSION JOINTS CLASS SS

ACTION: PASSED AS SUBMITTED

Item No. 6 (2020 SS) Mr. Orton pg 80

2020 Standard Specifications:

701.02	Materials
701.09*(g)*	*Pile Sleeves for MSE Walls*
701.14	Method of Measurement
701.15	Basis of Payment

ACTION: WITHDRAWN

FINAL DRAFT MINUTES

cc: Committee Members
FHWA
ICI

PROPOSAL TO STANDARDS COMMITTEE

PROBLEM(S) ENCOUNTERED: INDOT has a longstanding QC/QA soil unique provision. By its definition, unique is something that is for one or two jobs. INDOT tried this concept on multiple contracts over the past 10 years and it seems to have worked well. Thus, it is time to move the unique provision into an RSP and maybe the Standard Specifications.

PROPOSED SOLUTION: Convert the QC/QA soils unique provision into an RSP and consider inclusion in the Standard Specifications.

APPLICABLE STANDARD SPECIFICATIONS: New section 218

APPLICABLE STANDARD DRAWINGS: NA

APPLICABLE DESIGN MANUAL SECTION: yes; will need instructions to designers on when to use. Propose similar guidance as to when to use 501 QC/QA PCCP vs 502 PCCP.

APPLICABLE SECTION OF GIFE: yes

APPLICABLE RECURRING SPECIAL PROVISIONS: create new RSP

PAY ITEMS AFFECTED: Yes, create new pay items

APPLICABLE SUB-COMMITTEE ENDORSEMENT: Ad Hoc: Victoria Leffel, Jim Reilman, Nayyar Siddiki, Kurt Sommer, Haiyan Yang, earthwork contractors referred by ICI

IMPACT ANALYSIS (attach report):

Submitted By: Jim Reilman for Nayyar Siddiki

Title: State Materials Engineer

Organization: INDOT, Office of Materials & Tests

Phone Number: 317-522-9692

Date: 10/22/2020

FINAL DRAFT MINUTES

IMPACT ANALYSIS REPORT CHECKLIST

Explain the business case as to why this item should be presented to the Standards Committee for approval. Answer the following questions with Yes, No or N/A.

Does this item appear in any other specification sections? No
Will approval of this item affect the Approved Materials List? NA
Will this proposal improve:

Construction costs? Yes

Construction time? NA

Customer satisfaction? Yes

Congestion/travel time? NA

Ride quality? yes

Will this proposal reduce operational costs or maintenance effort? Yes

Will this item improve safety:

For motorists? yes

For construction workers? NA

Will this proposal improve quality for:

Construction procedures/processes? yes

Asset preservation? Yes

Design process? NA

Will this change provide the contractor more flexibility? Yes

Will this proposal provide clarification for the Contractor and field personnel? Yes

Can this item improve/reduce the number of potential change orders? NA

Is this proposal needed for compliance with:

Federal or State regulations? No

AASHTO or other design code? No

Is this item editorial? No

Provide any further information as to why this proposal should be placed on the Standards Committee meeting Agenda:

FINAL DRAFT MINUTES

(Note: This item was withdrawn from the November 19, 2020 meeting)

The Standard Specifications are revised as follows:

SECTION 218, BEGIN LINE 1, INSERT AS FOLLOWS:

SECTION 218 – QC/QA SOIL EMBANKMENT AND QC/QA SUBGRADE

218.01 Description

This work shall consist of the construction of a soil embankment and subgrade in accordance with 105.03, 203, and 207.

218.02 Quality Control

QC testing shall include DCP in accordance with ITM 509, LWD in accordance with ITM 508, moisture in accordance ITM 506, and one-point proctor in accordance with ITM 512.

(a) Quality Control Plan

The Contractor shall prepare and submit a QCP in accordance with ITM 803. The QCP shall be submitted to the Engineer and the Division of Materials and Tests at least 15 days prior to the Contractor's planned start date for embankment or subgrade. The QCP will be returned either as accepted or showing changes or corrections required within 15 days of receipt. If required to be changed or corrected, the QCP shall be resubmitted until it is accepted. Embankment and subgrade operations shall not begin until the Contractor receives written notice from the Engineer that the QCP has been accepted.

(b) Quality Control Technician

The Contractor shall provide a QC Technician. The QC Technician shall be qualified in accordance with the Department's Division of Materials and Tests Directive 107 for ITM 506, ITM 508, ITM 509, and ITM 512, and AASHTO T255.

(c) Ineffective or Unqualified Equipment or Personnel

The Department may require the replacement of ineffective or unqualified equipment or QC personnel. If such action is required by the Department, construction operations shall stop until appropriate corrective actions have been taken.

MATERIALS

218.03 Materials

Materials shall be in accordance with the following:

Chemical Modification of Soils.....215
Embankment.....203
Subgrade.....207

FINAL DRAFT MINUTES

CONSTRUCTION REQUIREMENTS

218.04 Mixing, Compacting, and Proofrolling

Chemically modified soils for subgrade, including grade preparation, pulverization, spreading, mixing, and compaction shall be in accordance with 215. QC testing shall be performed in accordance with the QCP and ITM 803 section 14.6 and section 14.7 for embankment and chemically modified soils respectively.

Soil Management shall be in accordance with the QCP and ITM 803. Adjustments shall be made to compaction procedures when the soil type changes.

Proofrolling prior to placing the first lift of embankment shall be conducted in accordance with 203.26. Proofrolling of the completed subgrade shall be completed in accordance with 203.26. The Engineer may require additional proofrolling passes if rutting or pumping is evident.

The Contractor shall provide documentation in accordance with the QCP and ITM 803 within 24 h of the completion of soil operations for each respective day.

218.05 Test Sections

Test sections shall be constructed in accordance with the QCP.

Test sections shall be constructed for non-chemically modified soils in accordance with 203, ITM 513, and ITM 803 to determine compaction pattern and rolling passes necessary to meet the DCP requirements. The roller equipment selected for use and rolling pattern shall be based on best compaction practice for the soil types encountered on the contract. The soil in the test section shall meet the requirements of 203.

218.06 Acceptance of Soil Compaction

Acceptance of the compaction of the soil embankment and subgrade will be based on the results of measurements and tests performed by the Engineer.

The moisture content and compaction acceptance of the soil embankment will be determined in accordance with 203.23 and 203.24. The moisture content and compaction acceptance of chemically modified soils will be determined in accordance with 215 or 207–R-687.

The Contractor shall notify the Engineer when a lift area is ready for acceptance testing. Testing will be performed at random locations in accordance with ITM 802 at the frequency described in the Frequency Manual.

218.07 Deficiencies

Individual embankment or subgrade locations that do not meet the requirements of 203.23 and 203.24, will be considered deficient. All locations exhibiting deflections or

FINAL DRAFT MINUTES

rutting in excess of the values shown in 203.26, as determined by the Department, will also be considered deficient.

When a deficiency is identified at the random location or by additional selective testing, the Contractor shall investigate and correct the deficiency by reworking the location in accordance with the QCP. The Engineer will subsequently randomly select at least two additional locations within the remaining lift area and perform acceptance testing. If either of the two additional locations fails to meet the acceptance criteria, then the entire lift area shall be evaluated by the Contractor in accordance with the QCP and reworked as necessary. All reworked areas shall be proofrolled in accordance with 203.26 before acceptance testing is resumed in that lift area.

Locations where rework is not required may still be reworked at the Contractor's option in accordance with the QCP. Reworked areas are subject to further review for excessive pumping or rutting at the discretion of the Department.

218.08 Method of Measurement

QC/QA soil embankment will be measured by the cubic yard in accordance with 203.27(e).

QC/QA subgrade will be measured in both cut and fill areas by the square yard per type. Chemicals for modification, excavation, aggregates, and geogrid materials will not be measured.

218.09 Basis of Payment

The accepted quantities of QC/QA embankment will be paid for at the contract unit price per cubic yard. The accepted quantities of QC/QA subgrade will be paid for at the contract unit price per square yard per type, complete in place.

Excavation and disposal of unsuitable material existing prior to beginning the QC/QA soil embankment work will be paid for at the contract unit price for QC/QA soil embankment.

Payment will be made under:

Pay Item	***Pay Unit Symbol***
QC/QA Soil Embankment	*CYS*
QC/QA Subgrade Treatment, Type _____	*SYS*

If QC/QA soil embankment is specified as a pay item, borrow and common excavation, unless otherwise specified, will not be paid for directly. The costs thereof shall be included in the cost of QC/QA soil embankment. Such price shall be full compensation for preparation of the natural ground on which the QC/QA soil embankment is to be placed and excavating, hauling, placing, spreading, and compaction of materials in accordance

FINAL DRAFT MINUTES

with 203.23. The costs of labor, equipment, tools, and necessary incidentals shall be included in the cost of QC/QA soil embankment. The cubic yards of suitable material used in the embankment excavated from the construction limits and paid for under a specific pay item will not be deducted from the QC/QA soil embankment quantities.

The cost of QC/QA subgrade treatments including testing, sampling, aggregates, chemicals for modification, geogrid, geotextile and geocell confining system, coarse aggregate for QC/QA subgrade Type IC, Type II, Type IV, Type IVA, Type V, water, and the excavation required, shall be included in the cost of the pay item.

Where QC/QA soil embankment has not been constructed and conditions exist below the specified subgrade compaction depth that prevent achieving the specified compaction, payment for correcting such conditions will be made based on the directed method of treatment.

The cost of geotextiles shall be included in the cost of other items.

The costs for the use of coal ash in QC/QA soil embankment construction, including, but not limited to testing of the material, encasement, additional erosion and sediment control measures, lateral underdrains and all incidentals shall be included in the cost of the pay items in this section.

All costs related to any other equipment required for the QC/QA soil process, all quality control procedures including the QCP, on-site training, testing facility, construction of test sections, quality control testing, and inspection shall be included in the pay items ~~of~~in this section.

The cost of excavation and disposal of QC/QA soil embankment unsuitable material encountered during rework shall be included in the cost of the pay items ~~of~~in this section.

FINAL DRAFT MINUTES

COMMENTS AND ACTION

SECTION 218 – QC/QA SOIL EMBANKMENT AND QC/QA SUBGRADE (Proposed new section)

DISCUSSION:
This item was introduced and presented by Mr. Reilman who explained that the Department has a longstanding QC/QA soil embankment unique special provision. By definition, unique is something that is for one or two jobs. INDOT tried this concept on multiple contracts over the past 10 years and it seems to have worked well. Thus, it is time to move the unique special provision into an RSP and possibly into the Standard Specifications.

Mr. Reilman withdrew this item pending further review of concerns from industry and welcomed any comments or suggestions.

Mr. Duncan, FHWA, said that FHWA believes that the acceptance frequency could be reduced.

FINAL DRAFT MINUTES

Motion: Second: Ayes: Nays: FHWA Approval:	Action: ___ Passed as Submitted ___ Passed as Revised _X_ Withdrawn
Standard Specifications Sections referenced and/or affected: SECTION 218 – QC/QA SOIL EMBANKMENT AND QC/QA SUBGRADE (Proposed new section). Recurring Special Provision references to: 207-R-687 (effective September 1, 2020). Standard Drawing affected: NONE Design Manual Sections affected: see proposal. GIFE Sections cross-references: NONE	___ 2022 Standard Specifications ___ Revise Pay Items List ___ Create RSP (No.___) Effective: RSP Sunset Date: ___ Revise RSP (No.___) Effective: RSP Sunset Date: ___ Standard Drawing Effective: ___ Create RPD (No. ___) Effective: ___ GIFE Update ___ SiteManager Update

PROPOSAL TO STANDARDS COMMITTEE

PROBLEM(S) ENCOUNTERED: Mandrel testing (post installation inspection) of pipe per 715.09 is not regularly being done on projects.

PROPOSED SOLUTION: Incorporate the proposed changes to 715.09 to better ensure specifications are being followed for post installation inspection of pipe.

APPLICABLE STANDARD SPECIFICATIONS: 715.08, 715.09, 715.14.

APPLICABLE STANDARD DRAWINGS: None

APPLICABLE DESIGN MANUAL SECTION: None

APPLICABLE SECTION OF GIFE: 4.11.2

APPLICABLE RECURRING SPECIAL PROVISIONS: None

PAY ITEMS AFFECTED: None

APPLICABLE SUB-COMMITTEE ENDORSEMENT: INDOT Pipe Committee

IMPACT ANALYSIS (attach report):

Submitted By: Jim Reilman

Title: State Materials Engineer

Organization: INDOT, Division of Materials and Tests

Phone Number: 317-522-9692

Date: 11/23/2020

FINAL DRAFT MINUTES

IMPACT ANALYSIS REPORT CHECKLIST

Explain the business case as to why this item should be presented to the Standards Committee for approval. Answer the following questions with Yes, No or N/A.

Does this item appear in any other specification sections? No
Will approval of this item affect the Approved Materials List? No
Will this proposal improve:

Construction costs? N/A

Construction time? N/A

Customer satisfaction? Yes

Congestion/travel time? N/A

Ride quality? N/A

Will this proposal reduce operational costs or maintenance effort? Yes

Will this item improve safety:

For motorists? N/A

For construction workers? N/A

Will this proposal improve quality for:

Construction procedures/processes? Yes

Asset preservation? Yes

Design process? N/A

Will this change provide the contractor more flexibility? No

Will this proposal provide clarification for the Contractor and field personnel? Yes

Can this item improve/reduce the number of potential change orders? N/A
Is this proposal needed for compliance with:

Federal or State regulations? N/A

AASHTO or other design code? N/A

Is this item editorial? No

Provide any further information as to why this proposal should be placed on the Standards Committee meeting Agenda:

FINAL DRAFT MINUTES

REVISION TO STANDARD SPECIFICATIONS

SECTION 109 - MEASUREMENT AND PAYMENT
109.05.1*(g) Mandrel Testing of Pipe*
SECTION 715 - PIPE CULVERTS, AND STORM AND SANITARY SEWERS
715.08 ~~Blank~~*Backfilling*
715.09 ~~Backfilling~~*Quality Adjustments*
715.14 Basis of Payment

(Note: Proposed changes shown highlighted gray.
This item was discussed and withdrawn on May 21, 2020 meeting.)

The Standard Specifications are revised as follows:

SECTION 109, AFTER LINE 841, INSERT AS FOLLOWS:

(g) Mandrel Testing of Pipe

Quality adjustments will be calculated in accordance with 715.09.

SECTION 715, BEGIN LINE 334, DELETE AND INSERT AS FOLLOWS:

~~**715.08 Blank**~~

715.~~09~~*08* Backfilling

All pipe trenches shall be backfilled with structure backfill~~ or flowable backfill~~. Structure backfill shall be placed in accordance with 211. ~~Flowable backfill shall be placed in accordance with 213.07 as shown on the plans or as directed~~*Structure backfill nominal sizes 2 in. and 1 1/2 in., shall not be used as pipe backfill on any pipe with exterior ribs, corrugations, or other profile.*

If a pipe is to be backfilled using one of the flowable backfill options, design calculations shall be submitted in accordance with 105.02, either proving the pipe will not float or detailing the methods to be taken to prevent the pipe from floating during installation of the flowable backfill. Prior to placing *one of the* flowable *backfill options for structure* backfill, all standing water shall be removed from the trench. If ~~the~~ water cannot be removed from the trench, *one of the non-flowable* structure backfill *options* shall be used ~~in lieu of flowable~~ *to* backfill to an elevation 2 ft above the groundwater. The remainder of the trench shall be backfilled as shown on the plans.

Where material other than structure backfill is allowed and used for backfilling, it shall be of such nature that compacts readily. That portion around and for 6 in. above the top of the pipe shall be free from large stones. This material shall be placed in layers not to exceed 6 in., loose measurement, and each layer compacted thoroughly by means of mechanical tamps.

Where coarse aggregate or 2 in., 1 1/2 in., 1 in., or 1/2 in. structure backfill is used for structure backfill, geotextile in accordance with 918.02(a) Type 2A shall be used.

Backfill for slotted drain pipe and slotted vane drain pipe shall consist of class A concrete on both sides of the pipe. During the backfilling and paving operations, the slot shall be covered to prevent infiltration of material into the pipe.

(a) Inspection, Mandrel Testing, and Acceptance

FINAL DRAFT MINUTES

REVISION TO STANDARD SPECIFICATIONS

SECTION 109 - MEASUREMENT AND PAYMENT
109.05.1*(g) Mandrel Testing of Pipe*
SECTION 715 - PIPE CULVERTS, AND STORM AND SANITARY SEWERS
715.08 ~~Blank~~*Backfilling*
715.09 ~~Backfilling~~*Quality Adjustments*
715.14 Basis of Payment

1. Inspection

All pipes, except underdrains, will be visually inspected for acceptance a minimum of 30 days after the completion of backfill operations. Pipes that cannot be visually inspected shall be video inspected for acceptance using equipment in accordance with 718.07. The Engineer will determine the sections of pipe to be video inspected.

For pipes that were video inspected, a copy of the video inspection shall be provided in a format acceptable to the Engineer. The video inspection shall be provided prior to performing the mandrel testing or if mandrel testing is not required, prior to acceptance of the pipe.

Commercial and private drive pipes are excluded from the video inspection and mandrel testing requirements.

~~For pipe not requiring mandrel testing that is determined to be unacceptable by the Engineer, the unacceptable pipe shall be replaced between the nearest pipe joints or to the nearest structure, or a remediation plan shall be prepared by a professional engineer and submitted to the Engineer for final determination.~~

2. Mandrel Testing, and Acceptance

After the visual or video inspection, the Contractor shall check *for* pipe deflection by performing ~~a~~ mandrel test*ing* as directed on pipes manufactured from materials listed in the following table. The Engineer will determine the runs of pipe installations to be mandrel tested with a minimum of 10% of the total length of each *pipe* material to be ~~inspected~~*tested*.

Pipes Required to Be Mandrel Tested	
Pipe Material	Standard Specifications
Corrugated Polyethylene Pipe*	907.17(b)
Corrugated Polypropylene Pipe	907.19
Profile Wall Polyethylene Pipe	907.20
Smooth Wall Polyethylene Pipe	907.21
Profile Wall PVC Pipe*	907.22
Smooth Wall PVC Pipe	907.23
* *When used as underdrain pipe, mandrel testing will not be required.*	

Results of mandrel testing shall be reported on the mandrel testing of pipe structures form. A copy of the completed form shall be submitted to the Engineer within 24

FINAL DRAFT MINUTES

h of completion of mandrel testing. The mandrel testing of pipe structures form is available on the Department's website.

Two mandrels shall be provided, one that is 95% of the pipe pay item diameter and another that is 92.5% of the pipe pay item diameter. The mandrel*s* shall have a minimum of nine arms or prongs ~~and a diameter that is 95% of the nominal pipe diameter~~. The Contractor shall *also* provide a proving ring ~~that is 95% of the nominal pipe diameter~~ for each mandrel. *One proving ring shall be 95% of the pipe pay item diameter and the other proving ring shall be 92.5% of the pipe pay item diameter. The proving ring and matching mandrel shall be from the same manufacturer. The Engineer will check each proving ring and mandrel to ensure they are the proper sizes prior to the Contractor performing the mandrel testing.*

The Contractor shall pull the mandrel *that is 95% of the pipe pay item diameter* through the *chosen runs of* pipe by hand. *All mandrel testing shall be performed in the presence of the Engineer. If the mandrel that is 95% of the pipe pay item diameter passes through the pipe when pulled by hand, the pipe run will be considered acceptable.* If ~~the~~*this* mandrel does not pass through the pipe, ~~the Contractor shall measure and report the minimum diameter of the deficient pipe to the Engineer~~*the locations where the mandrel does not pass shall be documented and reported to the Engineer. Where the 95% mandrel does not pass through the pipe run, the Contractor shall retest, pulling a mandrel that is 92.5% of the pipe pay item diameter through the pipe run by hand. If this mandrel does not pass through the pipe run, the locations where the mandrel does not pass shall be documented and reported to the Engineer.*

For every pipe material where the mandrel that is 95% of the pipe pay item diameter does not pass through the pipe when pulled by hand, the Engineer may order mandrel testing for the total length of that pipe material

(b) Pipe Determined to be Unacceptable or Deficient after Installation

1. Pipe Not Requiring Mandrel Testing

For installed pipe that is determined to be unacceptable by the Engineer, the unacceptable pipe shall be replaced between the nearest pipe joints or to the nearest structure, or a remediation plan shall be prepared by a professional engineer and submitted to the Engineer for review and final determination.

2. Pipe Requiring Mandrel Testing

If the minimum diameter of *any portion of* the ~~deficient~~ pipe *run* is between 92.5% and 95.0% of the ~~nominal~~ pipe *pay item* diameter, *the entire pipe run will be considered*

REVISION TO STANDARD SPECIFICATIONS

SECTION 109 - MEASUREMENT AND PAYMENT
109.05.1*(g) Mandrel Testing of Pipe*
SECTION 715 - PIPE CULVERTS, AND STORM AND SANITARY SEWERS
715.08 ~~Blank~~*Backfilling*
715.09 ~~Backfilling~~*Quality Adjustments*
715.14 Basis of Payment

deficient. ~~t~~*T*he Contractor shall *either replace the sections of deficient pipe or* provide an evaluation of the deficient pipe prepared by a professional engineer. The evaluation shall consider the severity of the deflection and its effects on structural integrity, environmental conditions, and the design service life of the pipe. A report summarizing the evaluation and including the professional engineer's recommendation for acceptance, remediation, or replacement of the pipe shall be submitted to the Engineer for review and final determination.

If the minimum diameter of the ~~deficient~~ pipe is ~~equal to or~~ less than 92.5% of the ~~nominal~~ pipe *pay item* diameter, the ~~deficient~~ pipe *run* shall ~~either~~ be replaced ~~or a remediation plan shall be prepared by a professional engineer and submitted to the Engineer for final determination~~.

~~The deficient pipe shall be replaced if the professional engineer's remediation plan recommends replacement of the pipe or if the pipe has been damaged.~~

Deficient pipe shall at a minimum be replaced between the nearest pipe joints or to the nearest structure. Replaced or remediated pipe sections *that originally required mandrel testing* shall *again* be mandrel tested a minimum of 30 days after the completion of backfill operations.

~~Commercial and private drive pipes are excluded from the mandrel testing and video inspection requirements.~~

~~Where material other than structure backfill or flowable backfill is allowed and used for backfilling, it shall be of such nature that compacts readily. That portion around and for 6 in. above the top of the pipe shall be free from large stones. This material shall be placed in layers not to exceed 6 in., loose measurement, and each layer compacted thoroughly by means of mechanical tamps. Where coarse aggregate is used for structure backfill, geotextile shall be installed.~~

~~An adequate earth cover, as shown on the plans, shall be placed over the structure before heavy equipment is operated over it.~~

~~Backfill for slotted drain pipe and slotted vane drain pipe shall consist of class A concrete on both sides of the pipe. During the backfilling and paving operations, the slot shall be covered to prevent infiltration of material into the pipe.~~

715.09 Quality Adjustments

FINAL DRAFT MINUTES

REVISION TO STANDARD SPECIFICATIONS

SECTION 109 - MEASUREMENT AND PAYMENT
109.05.1*(g) Mandrel Testing of Pipe*
SECTION 715 - PIPE CULVERTS, AND STORM AND SANITARY SEWERS
715.08 ~~Blank~~*Backfilling*
715.09 ~~Backfilling~~*Quality Adjustments*
715.14 Basis of Payment

For pipe deemed deficient as per 715.08(b)2 that is allowed to remain in place without remedial actions, a quality adjustment in accordance with 109 will be assessed at 50% of the unit price for the entire length of pipe between two successive structures.

For pipe deemed deficient as per 715.08(b)2 that receives remedial actions and subsequently successfully passes a mandrel that is 95% of the pipe pay item diameter, then a quality adjustment in accordance with 109 will be assessed at 25% of the unit price for the entire length of pipe between two successive structures.

For pipe deemed deficient as per 715.08(b)2 that is replaced and subsequently successfully passes a mandrel that is 95% of the pipe pay item diameter, then no quality adjustment will be assessed and that run of pipe will be paid at 100% of the unit price for the length of pipe replaced.

SECTION 715, AFTER LINE 675, INSERT AS FOLLOWS:

Adjustments to the contract payment with respect to pipe will be included in a quality adjustment in accordance with 109.05.1.

FINAL DRAFT MINUTES

COMMENTS AND ACTION

109.05.1*(g) Mandrel Testing of Pipe*
715.08 ~~Blank~~*Backfilling*
715.09 ~~Backfilling~~*Quality Adjustments*
715.14 Basis of Payment

DISCUSSION:
Mr. Reilman introduced and presented this item stating that mandrel testing, post installation inspection, of pipe in accordance with 715.09 is not regularly being done on projects. Mr. Reilman proposed to incorporate the proposed changes to 715.09 to better ensure that the specifications are being followed for post installation inspection of pipes.

Mr. Reilman withdrew this item pending further review of concerns received prior to the meeting and welcomed additional comments.

Mr. Duncan, FHWA, expressed concern about visual acceptance regarding commercial and private drives. Perhaps use mandrel testing.

Mr. Susong, from Rinker Materials, suggested adding end treatments to protect pipe ends to ensure proper flow. Mr. Reilman said it is worth considering even though that is beyond the scope of this item.

Motion: Second: Ayes: Nays: FHWA Approval:	Action: ___ Passed as Submitted ___ Passed as Revised _X_ Withdrawn
Standard Specifications Sections referenced and/or affected: 715.09 pg 697; 715.14 pg 703. Recurring Special Provision references in: NONE Standard Drawing affected: NONE Design Manual Sections affected: NONE GIFE Sections cross-references: 4.11.2	___ 2022 Standard Specifications ___ Revise Pay Items List ___ Create RSP (No.___) Effective: RSP Sunset Date: ___ Revise RSP (No.___) Effective: RSP Sunset Date: ___ Standard Drawing Effective: ___ Create RPD (No. ___) Effective: ___ GIFE Update ___ SiteManager Update

FINAL DRAFT MINUTES

PROPOSAL TO STANDARDS COMMITTEE

PROBLEM(S) ENCOUNTERED: There is confusion with a recent change to requiring a second cleaning of certain areas. Also, the level of abrasive blast cleanliness is at the minimum recommended by the manufacturer.

PROPOSED SOLUTION: Clean up the language to describe in more detail what is required and what areas are required to be cleaned a second time. As part of this clarification, the level of cleanliness is increased from SSPC-SP6 to SSPC-SP10 in order to provide a more optimum surface cleanliness for the primer.

APPLICABLE STANDARD SPECIFICATIONS: None

APPLICABLE STANDARD DRAWINGS: None

APPLICABLE DESIGN MANUAL SECTION: None

APPLICABLE SECTION OF GIFE: 5.24

APPLICABLE RECURRING SPECIAL PROVISIONS: 619-B-312

PAY ITEMS AFFECTED: None

APPLICABLE SUB-COMMITTEE ENDORSEMENT:

IMPACT ANALYSIS (attach report):

Submitted By: Jim Reilman

Title: State Materials Engineer

Organization: INDOT, Division of Materials & Tests

Phone Number: 317-522-9692

Date: 11/12/2020

FINAL DRAFT MINUTES

IMPACT ANALYSIS REPORT CHECKLIST

Explain the business case as to why this item should be presented to the Standards Committee for approval. Answer the following questions with Yes, No or N/A.

Does this item appear in any other specification sections? No
Will approval of this item affect the Approved Materials List? No
Will this proposal improve:

Construction costs? No

Construction time? No

Customer satisfaction? Yes

Congestion/travel time? N/A

Ride quality? N/A

Will this proposal reduce operational costs or maintenance effort? Yes

Will this item improve safety:

For motorists? N/A

For construction workers? N/A

Will this proposal improve quality for:

Construction procedures/processes? Yes

Asset preservation? Yes

Design process? N/A

Will this change provide the contractor more flexibility? N/A

Will this proposal provide clarification for the Contractor and field personnel? Yes

Can this item improve/reduce the number of potential change orders? Yes

Is this proposal needed for compliance with:

Federal or State regulations? No

AASHTO or other design code? No

Is this item editorial? No

Provide any further information as to why this proposal should be placed on the Standards Committee meeting Agenda:

FINAL DRAFT MINUTES

(Note: Proposed changes shown highlighted gray)

619-B-312 PAINTING BRIDGE STEEL

(Revised 05-21-20)

The Standard Specifications are revised as follows:

SECTION 619, BEGIN LINE 3, DELETE AND INSERT AS FOLLOWS:

619.01 Description

This work shall consist of preparing surfaces, disposing of waste ~~residue~~, and applying paint *or another coating* to steel bridges*, steel piling, bearing assemblies, or other steel items* in accordance with 105.03.

MATERIALS

619.02 Materials

Materials shall be in accordance with the following:

Epoxy Intermediate Paint .....909.02(b)
Finish Coat for Weathering Steel.....909.02(e)
Multi-Component Inorganic Zinc Silicate Primer .....909.02(a)1
Organic Zinc Primer.....909.02(a)2
Polyurethane Finish Coat.....909.02(c)
Structural Steel Coating Systems.....909.03
Waterborne Finish Paint.....909.02(d)

~~Material s~~Safety data sheets shall be provided in the QCP for all materials to be delivered to the project site.

SECTION 619, BEGIN LINE 32, DELETE AND INSERT AS FOLLOWS:

619.03 Quality Control and Quality Assurance

The Contractor shall be responsible for the quality of work on the contract and shall ensure that all work has been performed by accepted quality control methods. A QCP shall be prepared and submitted by the Contractor in accordance with ITM 803. No work may begin until written notice has been received that the QCP was accepted by the Engineer. The QC manager shall furnish the current referenced SSPC Standards at the project site.

Cleaning and painting shall be done by a Contractor certified as SSPC-QP 2 for cleaning and painting existing bridge steel on steel ~~bridges constructed~~*structures shown in the contract documents as being built* before 1995~~, regardless of whether the existing coating is advertised as non-hazardous based or hazardous based~~. Cleaning and painting shall be done by a Contractor that at a minimum is certified as SSPC-QP 1 for cleaning and painting new bridge steel or for cleaning and painting existing bridge steel on steel ~~bridges constructed~~*structures shown in the contract documents as being built* after 1994.

FINAL DRAFT MINUTES

REVISION TO SPECIAL PROVISIONS

619-B-312 PAINTING BRIDGE STEEL

SECTION 619, BEGIN LINE 87, DELETE AND INSERT AS FOLLOWS:

619.04 Prosecution of Work

Prosecution of work shall be in accordance with the applicable requirements of ~~108.03~~*108.04*. Once the cleaning and painting operations have begun, it shall be performed on all work days without stoppage until all work has been completed. If the contract contains more than one bridge, a schedule shall be included in the QCP which provides the sequence of work on the bridges. Once work has begun on a bridge, it shall be performed until complete, including all cleanup.

SECTION 619, BEGIN LINE 128, DELETE AND INSERT AS FOLLOWS:

619.07 ~~Environmental and~~ Safety *and Environmental* Requirements

~~P~~*Safety requirements, p*ollution control, and ~~waste~~ disposal of existing paint ~~residue~~ *waste* and debris shall be in accordance with the following requirements.

(a) Safety Requirements

The containment system shall be in accordance with 619.07(b)1a or 619.07(b)1b, as applicable, based on the year the structure was built as shown in the contract.

~~Workers shall be protected in accordance with IOSHA requirements~~*The Contractor shall follow OSHA rules and regulations and be responsible for determining the level of hazards that are present in the containment during the removal of the existing bridge coating operation. Once the Contractor establishes the level of hazard present, the Contractor shall be responsible for furnishing personal protective equipment to provide the degree of protection necessary for the established level of hazard.* All *Contractor and Department* personnel on the project site shall wear personal protective equipment to the level *of hazard* as determined by the sampling and monitoring requirements *performed by the Contractor*. The protective equipment shall be furnished by the Contractor, including to Department personnel. Training shall be given to all personnel *who are* provided with ~~the~~*personal* protective equipment. P*ersonal p*rotective equipment shall include, but not be limited to, clean air supplied respirators, air purifying respirators, conventional hood*s* as applicable, eye protection, and protective clothing. ~~Two rooms for changing and washing shall be provided on bridges containing hazardous-based coatings.~~

(~~a~~*b*) Pollution Control

Pollution control shall consist of two different operations. One shall be controlling and containing the atmosphere generated during the coating removal operation. The other shall be controlling and containing the solid waste stream generated as a result of the coating removal operation.

1. ~~Containment for Advertised Non-Hazardous Sites~~*Pollution Control during Existing Coating Removal Operations*

~~Blasting materials, scrapings, wire brushings, and paint particles shall be contained in accordance with SSPC-Guide 6, Class 2A with method A, level 2 emissions, specifically for non-hazardous primed bridges~~*During existing coating removal operations, the Contractor shall recognize that the environment created by removal of the existing coating*

FINAL DRAFT MINUTES

from the structure may create an atmosphere in which hazards to personnel on the jobsite are likely to be generated, and thus the Contractor shall be responsible for controlling and protecting the exposure of all workers and the surrounding environment from the hazards.

The characterization of the level of hazard of the existing coating that the Department considers to be present on the structure will be dictated by the year the structure was built as described below. The characterization of the level of hazard of the existing coating is not related to the results of the TCLP.

a. Containment for Structures Built Before 1995

For structures shown in the contract documents as being built before 1995, the Contractor shall provide a containment system in order to contain all blasting materials, scrapings, wire brushings, and paint particles in accordance with SSPC-Guide 6, Class 2A or greater with method A, level 1 emission control capability. The Contractor shall take samples and monitor the work environment in accordance with IOSHA requirements and shall provide personal protective equipment appropriate to the conditions present within the work environment.

b. Containment for Structures Built After 1994

For structures shown in the contract documents as being built after 1994, the Contractor shall provide a containment system in order to contain all blasting materials, scrapings, wire brushings, and paint particles in accordance with SSPC-Guide 6, Class 2A or greater with method A, level 3 emission control capability. The Contractor shall take samples and monitor the work environment in accordance with IOSHA requirements and shall provide personal protective equipment appropriate to the conditions present within the work environment.

~~**2. Containment for Advertised Hazardous Sites**~~

~~Blasting materials, scrapings, wire brushings, and paint particles shall be contained in accordance with SSPC-Guide 6, Class 2A or better with method A, level 0 emissions, for hazardous primed bridges.~~

Regardless of the level of containment as listed above, if a spill, as defined in IDEM Regulation 327 IAC 2-6.1 does occur, all work shall stop and immediate action shall be taken to clean up the site. Spills of material, that enter or threaten to enter the water, shall be handled in accordance with IDEM Regulation 327 IAC 2-6.1. The IDEM Emergency Response Branch, the local health department, and all water intake users within 500 ft of the bridge shall be immediately contacted and advised of the spill. Written documentation of all such contacts and actions shall be kept. All applicable Federal, State, and local rules and regulations described in ~~619.07(b)1~~*619.07(b)2b(1)* shall be observed.

2. Pollution Control of the Generated Waste Stream

~~3~~*a*. Waste Stream Sampling

FINAL DRAFT MINUTES

Each bridge shall generate a separate waste stream and shall not be commingled with other materials. ~~The~~*A* sample of *the* waste ~~residue~~*stream* from the bridge shall be obtained at the conclusion of the first day of the *coating* removal operation for that bridge. The sample will be shipped to be tested within 24 h in a manner agreed to by the Department and as described in the QCP. The Engineer will witness the extraction of the waste ~~residue~~*stream* sample. The Department will maintain custody of the waste ~~residue~~*stream* sample until it is shipped. The waste ~~residue~~*stream* sample shall be taken by random method as described in the QCP which reflects representation of the entire bridge. The samples shall be analyzed for all contaminants listed in ITM 803 by the TCLP. ~~All~~ *The* remaining waste ~~residue~~ shall be placed in an approved container. Such containers shall be labeled and maintained to comply with 40 CFR 264.

No*ne of the* waste shall remain on the booms or on any water surface overnight. All blasting debris shall be cleaned up after each day's work. All waste material shall be properly stored at the project site to prevent loss or pollution.

If the waste stream sample analysis is returned with one or more of the contaminants meeting or exceeding the regulatory level for the respective contaminant, the entire waste stream for that bridge shall be considered to exhibit the characteristic of toxicity and thus shall be characterized as and considered to be hazardous.

If the waste stream sample characterization is returned with none of the contaminants meeting or exceeding the regulatory level for the respective contaminant, the entire waste stream for that bridge shall be considered to not exhibit the characteristic of toxicity and thus shall be characterized as and considered to be non-hazardous.

~~*The characterization of the w*~~*Waste stream characterization as either hazardous or non-hazardous for disposal shall be based only on the results of the TCLP. The results of the TCLP do not dictate the level of the containment system required in accordance with 619.07(b)1.*

If hazardous materials are found *to be present* in the waste ~~residue~~ sample of ~~an advertised, non-hazardous site, the Contractor shall immediately stop all cleaning and painting operations on that bridge~~*a structure shown in the contract documents as being built after 1994*, ~~T~~*t*he Contractor shall *immediately* notify the Engineer that hazardous materials have been found and, if not addressed in the QCP, the Contractor shall submit revisions to the QCP that detail the necessary changes due to the presence of hazardous materials. The Contractor shall not return to work until the revised QCP is approved in writing.

~~(b)~~*b.* Waste Disposal

Regardless of the waste characterization obtained from the waste *stream* sample, disposal of existing paint and debris shall be in accordance with SSPC-Guide 7 and the following requirements.

FINAL DRAFT MINUTES

~~1.~~*(1)* Laws to be Observed

Federal and State laws and regulations regulate the disposal of bridge painting debris. Bridge paint debris shall be manifested or certified and shall be disposed of at an appropriate disposal facility.

The Contractor shall have direct knowledge regarding compliance with laws pertaining to pollution control and waste management such as, *but not limited to,* the following.

a. subtitle C of the RCRA, 40 CFR 261, 262, 263, 265, and 268;

b. the Solid Waste Rule, 329 IAC 10;

c. the Hazardous Waste Rule, 329 IAC 3.1;

d. the Air Pollution Rule 329 IAC 6-4;

e. the Water Pollution Rule, 327 IAC 2-6.1;

f. the United States Department of Transportation regulations 49 CFR 172.300; and

g. OSHA worker safety regulations 29 CFR 1926.

~~2.~~*(2)* Time Limitations

The maximum time limit from the date the generated waste is placed in a container and the date the material is transported to a permitted treatment, storage, and disposal facility shall be 90 calendar days.

~~3.~~*(3)* Marking of Spent Material Containers

Spent material containers shall be marked with the date that waste ~~residue~~ is first placed in the container. Until laboratory results *described in 619.07(b)2a* are received concerning the category of the waste ~~residue~~*stream*, the containers shall be labeled "LEAD PAINT WASTE DEBRIS" or "ZINC PAINT WASTE DEBRIS", as appropriate. The labeling shall include the contract number, bridge number, sample number, and sample date. Labeling of containers as hazardous waste will not be required until the appropriate laboratory analysis determines the waste ~~residue~~*stream* to be hazardous in accordance with the current RCRA hazardous waste definitions. Immediately upon notice that the waste ~~residue~~ is hazardous, the containers shall be marked in accordance with 49 CFR 172, Subpart D.

~~4.~~*(4)* Instruction for Disposal of Paint Waste ~~Residue~~

~~Sampling and analysis of the paint waste residue shall be performed to determine if the wastes are hazardous. If the waste residue is not found to be hazardous in accordance with current RCRA hazardous waste definitions, the waste residue material shall be~~

FINAL DRAFT MINUTES

~~disposed of at an appropriate disposal facility.~~ If the waste ~~residue~~*stream* is found to be hazardous, ~~IDEM will be notified and~~ *the Engineer will obtain* an EPA identification number ~~will be obtained~~*from IDEM*. This number will be provided to the Contractor within 30 days of the start of waste generation for bridges having hazardous waste paint debris. The waste ~~residue~~ from different bridges shall not be commingled. The Contractor shall have the following responsibilities:

a. determining the location for disposal, treatment, or recycling of the waste ~~residue~~, obtaining the Engineer's approval of the site, and arranging with the approved site for acceptance of the materials;

b. preparing a hazardous waste manifest, as required by Federal and State requirements, for signature;

c. scheduling the shipment of waste ~~residue~~ to the permitted disposal site;

d. ensuring that the hazardous waste manifest is carried in the transportation vehicle;

e. ensuring that all required hazardous materials placards are properly displayed on the vehicle;

f. ensuring prompt movement of the vehicle to the disposal site; and

g. returning one copy of signed manifest documents to the Engineer. A copy of the chemical and physical analysis of the waste *stream*, all deposit receipts, manifests, and required paperwork for disposal shall be given to the Engineer, and all waste ~~residues~~ disposed of before the ~~contract~~*waste disposal item* will be ~~accepted~~*paid*.

If the waste ~~residue~~*stream is found to be non-hazardous in accordance with current RCRA hazardous waste definitions, the waste* ~~*residue material*~~ *shall be disposed of at an appropriate disposal facility.*

~~5.~~*(5)* Instructions for Disposal of Other Project Generated Waste

~~The o~~*O*ther wastes that may be generated on the project include, but are not limited to, spent solvents from cleaning of equipment and empty or partially empty containers of paint, paint thinners, spent abrasives, and solvents. The Contractor shall recycle or dispose of all project generated waste materials.

FINAL DRAFT MINUTES

If the waste *stream* is defined as a hazardous waste in accordance with the current RCRA definitions, the waste shall be recycled or disposed of in accordance with ~~619.07(b)4~~*619.07(b)2b(4)*. All project generated waste and the method of recycling or disposal shall be identified in the QCP.

619.08 Surface Preparation *of Concrete and Steel*

The tops of all concrete and steel pier caps, concrete abutment caps, and 2 ft down all sides of concrete pier and abutment caps shall be washed. The washing shall be accomplished by means of a pressure washer with potable water. The pressure shall be between 800 and 1,500 psi. If detergents or other additives are added to the water, the surface shall be rinsed with potable water before the detergents dry.

Cleaning of steel surfaces shall be performed by an SSPC certified contractor. This requirement will not apply to the following:

(~~a~~*1*) shop cleaning; *or*

(~~b~~*2*) sections of beams or other structural members less than 180 sq ft of total area to be painted for the contract where heat-straightening or similar repairs have taken place.

Surfaces to be painted shall be cleaned in accordance with the SSPC classification, unless otherwise specified. Compressed air shall pass through an oil and water extractor before entering another apparatus.

~~Pressure washing in accordance with 619.08(a) and s~~*S*olvent cleaning in accordance with 619.08(~~b~~*a*) shall be performed to remove all oils, soluble salts, visible grease, and any other surface contaminants before all other cleaning methods are started.

Field cleaned steel surfaces shall be primed the same day as cleaned*, except for areas requiring a second abrasive blast cleaning. Those areas shall be primed the same day as the second cleaning*. If rust forms after cleaning, the surface shall be cleaned again before painting. Work shall be stopped when there is disagreement about whether a surface has been adequately cleaned. Written notification shall be provided specifically identifying the problem.

SECTION 619, AFTER LINE 326, DELETE AND INSERT AS FOLLOWS:

For structures shown on the contract documents as being built before 1995, the Contractor shall assume that mill scale is present on the existing steel. All mill scale shall be removed as a part of the cleaning operations.

~~**(a) Pressure Washing**~~

~~All surfaces to be painted and the tops of pier and abutment caps shall be washed. The washing shall be accomplished by means of a low pressure power water washer with potable water. The pressure shall be between 800 and 1,500 psi. If detergents or other~~

FINAL DRAFT MINUTES

~~additives are added to the water, the surface shall be rinsed with potable water before the detergents dry. All washed surfaces shall be completely free of all oils and soluble salts. The Contractor shall obtain the hold point release for pressure washing prior to beginning other surface preparation activities.~~

(~~b~~*a*) Solvent Cleaning

~~After the hold point for pressure washing cleaning has been released, s~~*S*olvent cleaning shall be performed in accordance with SSPC-SP 1.

After the hold point for solvent cleaning has been released, one or more of the following cleaning methods shall be performed.

(~~c~~*b*) Hand Tool Cleaning

Hand tool cleaning shall be in accordance with SSPC-SP 2.

(~~d~~*c*) Brush-Off Blast Cleaning

Brush-off blast cleaning shall be in accordance with SSPC-SP 7/NACE No. 4.

(~~e~~*d*) Commercial Blast Cleaning

Commercial blast cleaning shall be in accordance with SSPC-SP 6/NACE No. 3.

(~~f~~*e*) Near-White Blast Cleaning

Near-white blast cleaning shall be in accordance with SSPC-SP 10/NACE No. 2.

In addition, all steel within a cross-sectional area measuring 5 ft longitudinally, on both sides of a bridge deck joint, as well as all areas of visible corrosion pitting, as determined by the Engineer, shall be abrasive blast-cleaned two times. After the first cleaning, all dust shall be removed from the cleaned surfaces and the surfaces shall be wetted with potable water either by hand wiping or atomized low volume spray. The volume of water used shall be low enough to preclude runoff. The surfaces shall be left undisturbed for a minimum of 24 h then cleaned a second time to the specified standard.

(~~g~~*f*) White Metal Blast Cleaning

White metal blast cleaning shall be in accordance with SSPC-SP 5/NACE No. 1.

(~~h~~*g*) Power Tool Cleaning

Power tool cleaning shall be in accordance with SSPC-SP 3.

(~~i~~*h*) Commercial Grade Power Tool Cleaning

Commercial grade power tool cleaning shall be in accordance with SSPC-SP 15.

(~~j~~*i*) Power Tool Cleaning to Bare Metal

Power tool cleaning to bare metal shall be in accordance with SSPC-SP 11.

FINAL DRAFT MINUTES

~~*All areas within 5 ft on both sides of a bridge deck joint as well as all areas of significant pitting shall be cleaned twice using the same method used for the original cleaning, excluding solvent cleaning.*~~

SECTION 619, BEGIN LINE 467, INSERT AS FOLLOWS:

(e) Application of Paint

All paint coatings shall be of colors to produce a distinct contrast with adjacent coatings, including the color of a clean steel surface.

Paint shall be applied by either an airless or conventional spray method which has been recommended by the paint manufacturer. The compressed air used for painting shall pass through an oil and water extractor before entering the paint pot. However, areas to be painted which are inaccessible to spray application or areas requiring touchup may be painted with brush or daubers. Epoxy intermediate and polyurethane finish paints may *also* be applied by brushes or rollers provided the coating cures to a smooth and uniform finish. Spray shall be adjusted to produce a uniform coating.

SECTION 619, BEGIN LINE 546, DELETE AND INSERT AS FOLLOWS:

(a) Non-Weathering Steel

All structural steel shall be cleaned in accordance with 619.08(~~f~~*e*).

All structural steel shall receive an inorganic zinc primer, including faying surfaces of high strength bolted connections and areas in contact with concrete. Surfaces, other than the contact surfaces described above, which are inaccessible after erection shall be painted in the shop with the full paint system required on the completed bridge.

(b) Weathering Steel

All structural steel shall be left unpainted, except as shown on the plans. All diaphragms, stiffeners, and other appurtenances located within the limits shown on the plans shall be included in the painting area. Surfaces to be painted shall be cleaned in accordance with 619.08(~~f~~*e*). Surfaces shall be painted in accordance with 619.09(a), except the finish coat shall be in accordance with 909.02(e).

619.12 Field Painting New Steel Bridge

All structural steel surfaces which are accessible after final erection shall be painted with the remaining coatings specified for structural steel paint system in accordance with 619.09(a) in the field after final erection.

If application of inorganic zinc primer on a steel surface is not performed in the shop before erection of the bridge, the surfaces which are exposed shall be cleaned in accordance with 619.08(a)~~, 619.08(b),~~ and 619.08(~~f~~*e*). These surfaces shall then be painted with the structural steel paint system after final erection.

Surface areas where the inorganic zinc primer was damaged during shipping, handling, and erection shall be cleaned in accordance with 619.08(a)~~, 619.08(b),~~ and either

FINAL DRAFT MINUTES

619.08(~~c~~*d*) or 619.08(~~j~~*i*). Likewise, all bolt and field connections shall be cleaned in the same manner. All the damaged areas, and bolt and field connections shall then be painted with the inorganic zinc primer applied in the shop. This requirement will not apply to temporary steel bridges.

Where steel surfaces have been painted with the full paint system and the paint coatings have been damaged, the affected steel surface areas shall be cleaned in accordance with 619.08(~~j~~*i*). Structural steel paint system shall then be re-applied.

For weathering steel girders, caulk shall be applied to act as a drip bead as shown in the plans.

619.13 Painting Existing Steel Bridges

The surfaces to be cleaned and painted shall include the surfaces of all steel members of the superstructure, substructure, floor beams, stringers, plates, castings, bearing assemblies, ornamental handrails, lattice work, and other steel appurtenances. When shear connectors have been specified, the top of the top flange shall not be painted.

If the contract specifies clean steel bridge, the bridge steel shall be cleaned in accordance with 619.08(a)~~, 619.08(b),~~ and either 619.08(~~c~~*de*) or 619.08(~~j~~*i*). The structural steel paint system in accordance with 619.09(a) shall be used for painting.

If the contract specifies clean steel bridge, partial, the bridge steel shall be cleaned in accordance with 619.08(a)~~, 619.08(b),~~ and either 619.08(~~c~~*de*), or 619.08(h)~~, or 619.08(j)~~. The partial paint system in accordance with 619.09(b) shall be then used for painting.

619.14 Handling of Steel Bridge Superstructure to be Removed

If the Contractor elects to take ownership of the steel in accordance with 202.03, a QCP shall be submitted in accordance with 619.03. The entire surface area of the steel shall be cleaned in accordance with 619.08(d) prior to the steel leaving the construction limits and becoming the property of the Contractor. Mill scale shall be assumed to be present on the existing steel. Cleaning in accordance with 619.08(a) shall not be performed. A level of containment in accordance with 619.07(a) shall be used.

Testing of the waste stream and disposal of the waste ~~stream~~ produced by this cleaning shall be in accordance with 619.07.

619.14~~5~~ Drain Castings Treatment

Roadway drain castings located in a bridge deck shall be satisfactorily cleaned in accordance with 619.08(~~d~~*c*) or 619.08(~~h~~*g*). The castings shall not be shot-blasted.

The roadway drain castings shall be painted with a black finish coat in accordance with 909.02(c).

FINAL DRAFT MINUTES

If a roadway drain casting extension pipe is damaged or missing, it shall be replaced. The extension pipe shall be in accordance with 715.

619.16 Clean and Paint Bearing Assemblies

When shown on the plans or a pay item is included in the schedule of pay items, all bearing assemblies, including top and bottom plates of each assembly, shall be cleaned in accordance with 619.08(a) and 619.08(d). Pollution control shall be in accordance with 619.07.

If the pay item clean and paint bearing assemblies is listed in the schedule of pay items for a particular structure, the entire bearing assembly shall be painted with the structural steel paint system in accordance with 619.09(a).

If the pay item, paint steel bridge, or paint steel bridge, partial, is listed in the schedule of pay items for a particular structure, the entire bearing assembly shall be painted with the structural steel paint system that is being used on the rest of the bridge.

619.16.1 Clean and Paint Steel Piling

All exposed steel piling shall be cleaned in accordance with 619.08(a) and either 619.08(~~d~~e) or 619.08(i). The structural steel paint system in accordance with 619.09(a) shall be applied. The color of the topcoat shall be SAE-AMS-STD-595, color No. 13711.

619.~~15~~*17* Responsibility for Damage

Unless otherwise specified by the Engineer in writing, full containment shall be provided when performing the surface preparation operation and when applying all coats of paint, except primer coats, with spray equipment. All persons and property shall be protected from damage or injury from the surface preparation operations and painting operations by providing containment as described in the QCP. Persons and property shall include, but not be limited to, pedestrians, vehicles, and other traffic upon or underneath a bridge, all portions of the bridge superstructure and substructure, and all adjacent property. The Contractor shall be responsible for damages in accordance with 107.17.

619.~~16~~*18* ~~Blank~~*Top of Top Flange of Steel Structural Members*

When shown on the plans or a pay item is included in the schedule of pay items, the top of the top flange of steel structural members shall be cleaned in accordance with 619.08 by a contractor certified as SSPC-QP 2. The Contractor shall assume the existing coating on the top of the top flange contains hazardous materials and mill scale, and shall use pollution control and containment in accordance with 619.07(b)1. A QCP shall be prepared and submitted in accordance with 619.03. The steel shall be cleaned to a level of cleanliness in accordance with 619.08(~~d~~e) or 619.08(h), however solvent cleaning in accordance with 619.08(a) shall not be performed.

Each bridge shall generate a separate waste stream and shall not be commingled with other materials. The waste stream shall be sampled in accordance with 619.07 and all other requirements of 619.07 shall be followed. Once the result from the waste stream

FINAL DRAFT MINUTES

sampling is known and the waste stream is appropriately characterized as hazardous or non-hazardous, all waste shall be disposed of in accordance with 619.07(b).

619.~~17~~*19* Method of Measurement

Cleaning and painting ~~will not be measured for payment~~*of steel structural members*, *cleaning the top of the top flange of steel structural members, cleaning and painting of bearing assemblies, and cleaning and painting of steel piling will not be measured for payment. Cleaning areas around bridge joints and other areas with* ~~*significant*~~*visible corrosion pitting a second time will not be measured for payment.* Disposal of the waste ~~stream~~ generated by the cleaning operation will not be measured for payment.

Cleaning roadway drain castings, caulking joints of lapping members, and caulking on weathering steel will not be measured for payment.

For steel that will become the property of the Contractor, cleaning existing steel, removal of mill scale, testing, disposal of the waste~~ stream~~, containment, and all other items involved with~~ removing and properly disposing of the existing coating~~this work will not be measured as per 202.13.

If a ~~bridge is advertised~~*structure is shown in the contract documents* as *being built before 1995* ~~having existing hazardous materials~~, no measurement will be made of the area covered by mill scale. ~~For bridges advertised as having existing non-hazardous materials~~*Otherwise*, the area of structural steel covered by mill scale will be measured for payment after a proper cleaning of the entire containment area or an agreed large portion thereof and removing all other existing materials, including all paint and rust. The percentage of the area of structural steel covered by existing mill scale will be representative of this entire area. The pre-established remedies for this changed condition apply in accordance with 104.02(d) and ~~619.18~~*619.20*.

Roadway drain casting extension pipe will be measured in accordance with 715.13.

The estimated weight, length, number of steel spans, surface area of steel, and type of primer shown on the plans or in the Proposal book is incidental information. Such information is approximate only. The Department will not guarantee its accuracy.

619.~~18~~*20* Basis of Payment

Existing steel bridges to be cleaned, or partially cleaned, whichever is specified, will be paid for at the contract lump sum price for clean steel bridge or clean steel bridge, partial, at the bridge number specified. *Cleaning the top of the top flange of existing steel bridges will be paid for at the contract lump sum price for clean steel bridge, top flanges, at the bridge number specified.* Existing steel bridges to be painted, or partially painted, whichever is specified, will be paid for at the contract lump sum price for paint steel bridge or paint steel bridge, partial, at the bridge number specified.

FINAL DRAFT MINUTES

When specified as a separate pay item in the contract, cleaning and painting bearing assemblies will be paid for at the contract lump sum price for clean and paint bearing assemblies, at the bridge number specified.

When specified as a separate pay item in the contract, cleaning and painting steel piling will be paid for at the contract lump sum price for clean and paint steel piling, at the bridge number specified.

(a) Pre-Established Remedies for Changed Conditions

1. Discovery of Hazardous Materials but No Mill Scale on a ~~Site Advertised as Non-Hazardous~~*Structure Shown in the Contract Documents as Being Built After 1994*

The payment will be an additional 25% of the clean steel bridge item as computed in 619.~~18~~*20*(b)1 in accordance with 109.05 as payment for all additional costs incurred.

2. Discovery of Mill Scale but No Hazardous Materials on a ~~Site Advertised as Non-Hazardous~~*Structure Shown in the Contract Documents as Being Built After 1994*

If, on a ~~bridge advertised as having existing non-hazardous materials~~*structure shown in the contract documents as being built after 1994* and the presence of hazardous materials has not been confirmed by laboratory analysis, the area of structural steel covered by mill scale comprises greater than ~~15~~*25*% of the area of structural steel in accordance with ~~619.17~~*619.19*, additional compensation for the removal of the mill scale will be made as an adjustment to the clean steel bridge item~~ in accordance with the following:~~. *The adjustment will be an additional payment of 30% of the clean steel bridge item as computed in accordance with 619.20(b)1 will be made.*

~~a. For areas of structural steel greater than 15% and up to and including 25% of the area covered by mill scale, an additional payment of 15% of the clean steel bridge item as computed in accordance with 619. 18 (b) 1 will be made.~~

~~b. For areas of structural steel greater than 25% and up to and including 50% of the area covered by mill scale, an additional payment of 30% of the clean steel bridge item as computed in accordance with 619. 18 (a) 1 will be made.~~

~~c. For areas of structural steel greater than 50% and up to and including 75% of the area covered by mill scale, an additional payment of 45% of the clean steel bridge item as computed in accordance with 619. 18 (b) 1 will be made.~~

~~d. For areas of structural steel greater than 75% of the area covered by mill scale, an additional payment of 60% of the~~

FINAL DRAFT MINUTES

~~clean steel bridge item as computed in accordance with 619.18 (b) 1 will be made.~~

3. Discovery of Hazardous Materials and Mill Scale on a ~~Site Advertised as Non-Hazardous~~*Structure Shown in the Contract Documents as Being Built After 1994*

If the laboratory analysis of a waste ~~residue~~*stream* sample on a ~~bridge advertised as having non-hazardous materials~~*structure shown in the contract documents as being built after 1994* yields results indicating the presence of hazardous materials, the entire bridge shall be considered as having mill scale and the following pre-established remedy for this changed condition in accordance with 104.02(d) shall apply. If agreed to in writing between the Contractor and the Department, the work shall proceed with the Contractor assuming all risks for removal of mill scale. An additional 55% of the clean steel bridge item as computed in 619.~~18~~*20*(b)1 in accordance with 109.05 will be paid as additional compensation for the removal and disposal of the hazardous materials, the removal of the mill scale, the additional containment required, and all other incidental items associated with the removal of the hazardous materials and mill scale.

(b) Prices used in Pre-Established Remedies to Changed Conditions

The following prices will be computed and used as the price for the pay item identified below in all pre-established remedies to changed conditions referenced in this section.

The price for the clean steel bridge item, per bridge, used in all pre-established remedies to changed conditions referenced in this section will be limited to the lesser of the following:

1. 70% of the sum of the clean steel bridge item and paint steel bridge item for that bridge; or

2. the actual amount for the clean steel bridge item for that bridge shown in the Schedule of Pay Items.

Roadway drain casting extension pipe will be paid for in accordance with 715.14.

For steel that will become the property of the Contractor, payment for cleaning existing steel, removal of mill scale, testing, disposal of the waste~~ stream~~, containment, and all other costs involved ~~with removing and properly disposing of the existing coating~~this work will be in accordance with 202.14.

The cost of transportation and disposal of waste materials, waste ~~residues~~, waste ~~residue~~ containers, and all other debris generated from ~~environmental~~*pollution* control and cleaning that is disposed of will be paid for at the contract lump sum price for disposal of cleaning waste, hazardous or non-hazardous, at the bridge number specified.

FINAL DRAFT MINUTES

Payment will be made under:

Pay Item	**Pay Unit Symbol**
Clean and Paint Bearing Assemblies, Br. No. ____	*LS*
Clean and Paint Steel Piling, Br. No. ____	*LS*
Clean Steel Bridge, Partial, QP- ____, Br. No. ____	LS
Clean Steel Bridge, QP- ____, Br. No. ___	LS
Clean Steel Bridge, Top Flanges, QP-2, Br. No. ____	*LS*
Disposal of Cleaning Waste, _____, Br. No.____ waste type	LS
Paint Steel Bridge, Br. No.____	LS
Paint Steel Bridge, Partial, Br. No.____	LS

The cost to prepare a QCP shall be included in the cost of the pay items of this section. The cost of providing the Department with access to the bridge and seasonal or weather limitations shall be included in the cost of the pay items of this section.

If a ~~bridge is advertised as having existing hazardous materials~~ *structure is shown in the contract documents as being built before 1995*, no additional payment will be made for the removal of mill scale. The cost of the removal of mill scale shall be included in the cost of clean steel bridge ~~or~~, clean steel bridge, partial*, clean and paint bearing assemblies, clean and paint steel piling, or clean steel bridge, top flanges*.

If a ~~bridge is advertised as having existing non-hazardous materials~~*structure is shown in the contract documents as being built after 1994* and the percentage of the area covered by mill scale is less than or equal to ~~15~~*25*% of the total structural steel surface area of a bridge measured in accordance with ~~619.17~~*619.19* no additional payment will be made for the removal of mill scale. The cost of the removal of mill scale shall be included in the cost of clean steel bridge or clean steel bridge, partial.

The cost of furnishing all materials, equipment, and labor required for ~~washing,~~ solvent cleaning, scraping, steel brushing, or other acceptable methods for removing paint in the locations directed shall be included in the cost of clean steel bridge ~~or~~, clean steel bridge, partial*, clean and paint bearing assemblies, clean and paint steel piling, or clean steel bridge, top flanges*. The cost of cleaning roadway drain castings shall be included in the cost of clean steel bridge or clean steel bridge, partial.

The cost of providing containment in accordance with ~~619.15~~*619.07 and 619.17* and personal protective equipment shall be included in the cost of the pay items of this section.

The cost of furnishing all materials, equipment, and labor required to perform the quality control tasks outlined in 619.03 shall be included in the cost of clean steel bridge

FINAL DRAFT MINUTES

or*,* clean steel bridge, partial, *clean and paint bearing assemblies, clean and paint steel piling, or clean steel bridge, top flanges.*

The cost of furnishing all materials including caulk, equipment, and labor to perform caulking and painting, including the stripe coats, with the structural steel paint system or the partial paint system shall be included in the cost of paint steel bridge or paint steel bridge, partial. The cost of switching stripe coat application methods shall be included in the cost of paint steel bridge or paint steel bridge, partial. The cost of furnishing all materials, equipment, and labor to perform painting of the roadway drain castings shall be included in the cost of paint steel bridge or paint steel bridge, partial.

The cost of all equipment, material, labor, testing, use of special cleaning methods, and shipping of waste ~~residue~~*stream* samples shall be included in the cost of the clean steel bridge or*,* clean steel bridge, partial, *clean and paint bearing assemblies, clean and paint steel piling, or clean steel bridge, top flanges, pay items.*

The cost of dust removal, wetting, and cleaning areas ~~around bridge joints and other areas with significant~~within the cross sectional area measuring 5 ft longitudinally on both sides of a bridge deck joint as well as all areas of visible corrosion pitting a second time shall be included in the clean steel bridge, clean steel bridge, partial, clean and paint bearing assemblies, or clean steel bridge, top flanges pay items.

When a pay item is included in the schedule of pay items for clean and paint bearing assemblies, all costs associated with cleaning and painting bearing assemblies, except disposal of cleaning waste, shall be included in the cost of the pay item. If clean steel bridge, clean steel bridge, partial, paint steel bridge, or paint steel bridge, partial, are included as pay items in the schedule of pay items, no separate payment will be made for cleaning and painting bearing assemblies on that bridge number. The cost of cleaning and painting bearing assemblies shall be included in the cost of the respective clean steel bridge, clean steel bridge, partial, paint steel bridge, or paint steel bridge, partial, pay items for that bridge number.

When a pay item is included in the schedule of pay items for clean and paint steel piling, all costs associated with cleaning and painting steel piling, except disposal of cleaning waste, shall be included in the cost of the pay item.

FINAL DRAFT MINUTES

COMMENTS AND ACTION

619-B-312 PAINTING BRIDGE STEEL

DISCUSSION:

This item was introduced and presented by Mr. Reilman who stated that there has been some confusion with a recent change to requiring a second cleaning of certain areas. Also, the level of abrasive blast cleanliness is at the minimum recommended by the manufacturer.

Mr. Reilman proposed to clean up the language in 619 to describe in more detail what is required and what areas are required to be cleaned a second time. As part of this clarification, the level of cleanliness is increased from SSPC-SP6 to SSPC-SP10 in order to provide a more optimum surface cleanliness for the primer.

Mr. Koch asked about the language in 619.08(e) regarding clarification of the wetting and wait times since turn-around times can be critical. Mr. Reilman stated that there are concerns that the beam ends could continue corroding even when encased in concrete. If there are soluble salts present, they will flash rust rather quickly, hence the 24 h, and can be removed by the second abrasive blast cleaning. If they are not removed, they will lead to premature failure of the coating system. The time portion is critical as the longer we wait, the more soluble salts "show themselves" and are able to be removed. So it is more than just a matter of letting it dry.

In response to Mr. Boruff's question, Mr. Reilman explained the differences in this new process compared to the old process and that this new process provides a better level of cleanliness.

Mr. Corrice asked about recycling of materials, which was explained by Mr. Reilman.

There was no further discussion and this item passed as submitted.

Motion: Mr. Reilman Second: Mr. Dave Ayes: 9 Nays: 0 FHWA Approval: YES	Action:	
	X	Passed as Submitted
		Passed as Revised
		Withdrawn
Standard Specifications Sections referenced and/or affected: Section 619 begin pg 502.	X	2022 Standard Specifications
		Revise Pay Items List
Recurring Special Provision references in: 619-B-312 PAINTING BRIDGE STEEL		Create RSP (No.___) Effective: RSP Sunset Date:
Standard Drawing affected: NONE	X	Revise RSP (No. 619-B-312) Effective: June 1, 2021 RSP Sunset Date: 2022 SS book
Design Manual Sections affected: NONE		Standard Drawing Effective:
GIFE Sections cross-references: 5.24		Create RPD (No. ___) Effective:
	X	GIFE Update
		SiteManager Update

FINAL DRAFT MINUTES

PROPOSAL TO STANDARDS COMMITTEE

PROBLEM(S) ENCOUNTERED:
A better method for the repair of joints in concrete pavement is needed. Existing methods have involved the removal of deteriorated concrete at the joints and replacement with hot mix asphalt which is not a good long-term repair. In some situations, repair of the joints involved removal of entire slabs which is excessive and not ideal.

PROPOSED SOLUTION:
Beginning in 2017 INDOT developed a new methodology for the repair of concrete joints. The repairs are isolated near the joints and in the top half of the slabs. Deteriorated concrete is replaced with cementitious repair materials that are a better suited match for the existing PCCP and provide the best opportunity for success of long-term repairs. This is described in a new 509 specification.

APPLICABLE STANDARD SPECIFICATIONS: 509 (new), 901

APPLICABLE STANDARD DRAWINGS: none

APPLICABLE DESIGN MANUAL SECTION: none

APPLICABLE SECTION OF GIFE: none

APPLICABLE RECURRING SPECIAL PROVISIONS:

PAY ITEMS AFFECTED: none

APPLICABLE SUB-COMMITTEE ENDORSEMENT: ad hoc group: Jim Reilman, Michael Nelson, Tony Zander

IMPACT ANALYSIS (attach report):

Submitted By: Jim Reilman

Title: State Materials Engineer

Organization: INDOT Division of Materials and Tests

Phone Number: 317-522-9692

Date: 11-23-20

FINAL DRAFT MINUTES

IMPACT ANALYSIS REPORT CHECKLIST

Explain the business case as to why this item should be presented to the Standards Committee for approval. Answer the following questions with Yes, No or N/A.

Does this item appear in any other specification sections? No

Will approval of this item affect the Approved Materials List? No

Will this proposal improve:

Construction costs? N/A

Construction time? N/A

Customer satisfaction? N/A

Congestion/travel time? N/A

Ride quality? N/A

Will this proposal reduce operational costs or maintenance effort? Yes

Will this item improve safety:

For motorists? N/A

For construction workers? N/A

Will this proposal improve quality for:

Construction procedures/processes? Yes

Asset preservation? Yes

Design process? N/A

Will this change provide the contractor more flexibility? No

Will this proposal provide clarification for the Contractor and field personnel? Yes

Can this item improve/reduce the number of potential change orders? No

Is this proposal needed for compliance with:

Federal or State regulations? No

AASHTO or other design code? No

Is this item editorial? No

Provide any further information as to why this proposal should be placed on the Standards Committee meeting Agenda: N/A

FINAL DRAFT MINUTES

REVISION TO STANDARD SPECIFICATIONS AND STANDARD DRAWINGS

SECTION 509 - PORTLAND CEMENT CONCRETE PAVEMENT, PCCP, JOINT REPAIR (PROPOSED NEW)
SECTION 901 - PCC MATERIALS
901.01(d) Rapid Hardening Hydraulic Cement

The Standard Specifications are revised as follows:

SECTION 509, BEGIN LINE 1, INSERT AS FOLLOWS:

SECTION 509 - PORTLAND CEMENT CONCRETE PAVEMENT, PCCP, JOINT REPAIR

509.01 Description

This work shall consist of partial depth repairs and bottom-half of slab repairs at PCCP joints in accordance with 105.03.

MATERIALS

509.02 Materials

Materials shall be in accordance with the following:

Admixtures for Use in Concrete.....912.03
Chemical Anchor System.....901.05
Coarse Aggregate, Class A, Size No. 12.....904*
Curing Materials.....912.01(e)2
Epoxy Coated Reinforcing Bars.....910.01(b)9
Fine Aggregate, Size No. 23 904
Joint Filler.....906.01
Joint Sealant, Hot Poured .....906.02(a)2
Latex Modifiers.....912.04
Portland Cement.....901.01(b)
Rapid Hardening Hydraulic Cement.....901.01(d)
*Rapid Setting Patch Materials**.....901.07*
Water.....913.01

* *Crushed stone only*
** *The material may be extended with a coarse aggregate that is approved by the manufacturer and the Engineer.*

Organic retarders, including food grade citric acid, may be used in concrete containing rapid hardening hydraulic cement.

Prepackaged concrete patching material shall be identified as grade 3U18 or 3U58 and selected from the Department's list of Concrete for PCCP Joint Repair.

509.03 Concrete Mix Design

A concrete mix design, CMD, for the partial depth joint repair and bottom-half joint repair shall be identified as being one of the following types and shall be in accordance with 509.04.

(a) Prepackaged concrete patching material, ~~(~~CPM~~)~~

FINAL DRAFT MINUTES

(b) Ordinary portland cement-based concrete, ~~(~~OPCC~~)~~
(c) Rapid hardening cement-based concrete, ~~(~~RHCC~~)~~
(d) Latex modified concrete, ~~(~~LMC~~)~~
(e) Latex modified concrete, very early strength, ~~(~~LMC-VE~~)~~
(f) Rapid setting patch materials, ~~(~~RSP~~)~~.

A concrete mix design submittal, CMDS, for OPCC, RHCC, LMC and LMC-VE shall be submitted in accordance with 506.03, except that the trial batch shall be in accordance with 509.05. Prepackaged concrete patching materials, CPM and RSP, are not required to follow the submittal format of a CMDS; however, the Department shall be notified of their intended use. The CMDS, or notification of using CPM or RSP, shall be submitted a minimum of seven calendar days prior to the trial batch.

509.04 Concrete Mix Criteria

The fine aggregate for OPCC, RHCC, LMC, or LMC-VE shall be at least 48% but not more than 52% of the total volume of the aggregate in each unit volume of concrete. Proportions shall be based on aggregates in the bulk SSD condition.

The blend of coarse and fine aggregates for OPCC, RHCC, LMC or LMC-VE shall meet the requirements stated in the table below. Aggregate volumes within the repair concrete will be determined based on the bulk SSD properties for each aggregate:

Combined Gradation of Coarse and Fine Aggregates	
Sieve Size	Percent Passing
3/8 in. (9.5 mm)	98 - 100
No. 4 (4.75 mm)	77 - 93
No. 8 (2.36 mm)	40 - 80
No. 16 (1.18 mm)	25 - 50
No. 30 (600 µm)	15 - 35
No. 50 (300 µm)	0 - 18
No. 100 (150 µm)	0 - 8
No. 200 (75 µm)	0 - 2.3

(a) CPM or OPCC

CPM or OPCC shall produce workable mixtures, with the minimum amount of water, having the following properties:

Portland cement content..... 846 lb~~s~~/cu yd
Maximum Slump for OPCC and CPM 3U18..... 1.5 in. [A]
Maximum Slump for CPM 3U58 ..... 6 in. [A]
Maximum water/cementitious ratio..... 0.400 [B]
Air Content ..... 7.0% ±1.5%
Minimum modulus of rupture ..... 500 psi at 7 days [C]

FINAL DRAFT MINUTES

Minimum Compressive Strength ..... 3,200 psi at 7 days [D]
Maximum Shrinkage in air ..... 0.060% at 28 days [D]
Relative yield for OPCC..... 1.00 ±0.02

[A] *Measured five minutes after discharge from the mixer.*
[B] *The target water cement ratio shall be established at the time of the trial batch and shall be based on the slump requirement.*
[C] *Concrete beams and cylinders cast for the purpose of evaluating the mix criteria shall be cured in accordance with AASHTO T23 Section 10.1, Standard Cure conditions.*
[D] *The maximum allowable shrinkage will only apply if the Contractor requests to omit tooling as part of re-establishing the longitudinal joint prior to sawing. Testing shall be in accordance with ASTM C157 and conducted on specimens cast using the same materials stated in the CMDS. Approval will be based on a Type A certification in accordance with 916 which shall be submitted to the Department's Concrete Engineer.*

Air entraining admixtures may be used. No other chemical admixtures shall be used.

(b) RHCC, LMC, or LMC-VE

RHCC, LMC, or LMC-VE shall be proportioned to meet the following requirements and properties:

Portland cement content for LMC .....658 lbs/cu yd, minimum
Rapid hardening cement content
for RHCC or LMC-VE.....658 lbs/cu yd, minimum
Maximum allowable water/cementitious ratio
for RHCC.....0.450 [A]
Slump.....3 to 7 in. [B]
Air Content for RHCC.....6.5% ±1.5% [C]
Air Content for LMC and LMC-VE.....0.0% - 6.0%
Minimum modulus of rupture .....500 psi [D]
Minimum Compressive Strength .....3,200 psi [D]
Maximum Shrinkage in air .....0.060% at 28 days [E]

[A] *During production of RHCC, the water cement ratio shall be maintained within ±0.020 of the target stated on the CMDP, not to exceed 0.450.*
[B] *Measured four to five minutes after discharge from the mixer.*
[C] *If the RHCC has a permeability of 900 coulombs or less at 56 days, the acceptable range of air content is allowed to be the same as LMC and LMC-VE. Verification of this property will be determined from testing of specimens cast at the trial batch. Testing will be done per AASHTO T277, with the value determined by averaging the result of two specimens.*

FINAL DRAFT MINUTES

[D] *Concrete beams and cylinders cast for the purpose of evaluating the mix criteria shall be cured in accordance with AASHTO T23 Section 10.1, Standard Cure conditions. RHCC and LMC-VE shall achieve the minimum modulus of rupture in 12 hours or less. LMC shall achieve the minimum modulus of rupture in 24 hours or less. RHCC, LMC and LMC-VE shall provide opening to traffic within the requirements for maintenance of traffic and lane closure restrictions.*

[E] *The maximum allowable shrinkage will only apply if the Contractor requests to omit tooling the longitudinal joint prior to sawing. Testing shall be in accordance with ASTM C157 and conducted on specimens cast from concrete at the trial batch. Approval will be based on a Type A certification in accordance with 916, which shall be submitted to the Department's Concrete Engineer.*

(c) RSP

Pre-packaged RSP material may be extended with a coarse aggregate as recommended by the manufacturer. Water shall be added in an amount not to exceed the amount recommended by the manufacturer. The material shall meet the same requirements for slump, compressive strength, and shrinkage as stated in 509.04(b).

509.065 Quality Control Plan

A quality control plan, QCP, shall be in accordance with sections 1.1 through 4.7 of ITM 803, except that the Quality Control Technician shall be an ACI Certified Technician, Level I or higher. As a minimum, the QCP shall contain the following information concerning aspects of producing, placing, finishing, and curing the joint repair concrete for joint restoration:

(a) Copies of all applicable AASHTO, ASTM, and ITM standards relevant to work being performed.

(b) Testing facility, if applicable, and a list of testing equipment meeting the requirements of Section 6.3.1 of ITM 803.

(c) Materials shall be identified as to their source, transportation, handling, and storage.

(d) Process control of aggregate when bulk aggregate is used. To include, but not limited to:

1. Gradation testing for each aggregate and calculation of blended gradation for control within allowable tolerance.

2. Absorption values for each aggregate, how they were determined, and subsequently checked.

FINAL DRAFT MINUTES

3. Daily measurement and control of moisture content of each aggregate used in the concrete.

(e) Trial batch demonstration shall be described as to procedures, location, mixing equipment, batching sequence, accuracy, and verification. The identification and intended use of each concrete mix.

(f) Batching of concrete during repair operations shall be described to include weighing on scales, intended size of the batch, batching method, sequence, and mixing time. The methods to monitor materials used and the record of each batch shall also be included.

(g) Process control of concrete to address sampling and testing for slump, relative yield, air content, water cementitious ratio, and temperature. The frequency of tests shall be the first batch of the day and not less than three times per day including the first. If volumetric batching of concrete is utilized, the yield will be checked as described in 722.05(a) at the beginning of the day and not less than two times per day including the first load from each mobile mixer. The QCP shall include details as to actions in response to test results.

(h) Joint repair operations shall be described, to include the materials and equipment used for re-establishing longitudinal and transverse joints; delivery, placement, consolidation, finishing, smoothness, texturing, and curing of concrete, and procedures for monitoring each operation.

(i) Process control for weather restrictions shall be addressed, including what materials will be on-hand to protect the edges and surface of the repair area, and what corrective actions are proposed in case the joint repair concrete is damaged by rain.

(j) Documentation and submittals.

509.~~05~~06 Trial Batch

A trial batch shall be produced and tested to verify that the repair concrete is in accordance with the appropriate concrete mix criteria for CPM, OPCC, RHCC, LMC, LMC-VE, or RSP material. The trial batch shall be conducted prior to production. The equipment used for mixing concrete at the trial batch shall be the same as what is identified

in the QCP for use during field production. The modulus of rupture from flexural strength testing and compressive strength will be determined by averaging a minimum of two tested specimens for each age. The beams and cylinders ~~will~~shall be cured in accordance with AASHTO T23 Section 10.1, Standard Cure conditions. Only the specimen types intended for job control in accordance with 509.14 and determining opening to traffic strength in accordance with 509.17 are required to be included in the trial batch. The Engineer will test the concrete for the plastic and hardened concrete properties as follows using the property values listed in 509.04.

	CPM	*OPCC*	*LMC*	*RHCC, LMC-VE*	*RSP*
Compressive strength	*12, 36, 72 h*	*12, 36, 72 h*	*12, 24, 48 h*	*3, 6, 12, 24 h*	*3, 6, 12 h*
Modulus of rupture	*12, 36, 72 h*	*12, 36, 72 h*	*12, 24, 48 h*	*3, 6, 12, 24 h*	*3, 6, 12 h*
Plastic testing	*air, slump, W/C ratio**	*relative yield, air, slump, W/C ratio**	*relative yield, air, slump*	*relative yield, air, slump*	*slump*
**The W/C ratio will be calculated after mix has been tested for slump*					

The Engineer will provide the Contractor the results of the tests. Relative yield will be measured in accordance with 722.05(a) for repair concrete produced in a volumetric mixer. Mobile mixers will be calibrated in accordance with 722.13.

The trial batch shall be of a sufficient quantity to allow the Engineer to perform all required tests from the same batch. Trial batch concrete shall not be used for more than one test.

CONSTRUCTION REQUIREMENTS

509.07 Pre-Work Meeting Requirements

A pre-work meeting between the Engineer and the Contractor will be held on-site prior to beginning the work. The Contractor shall be prepared to discuss the following:

(a) Work schedule
(b) Traffic control plan
(c) Equipment calibration and adjustments
(d) Inspection and evaluation of the condition and adequacy of equipment, including units for transport of materials
(e) CMDP
(f) The Contractor's daily rate of production per work crew
(g) Quality Control Plan.

FINAL DRAFT MINUTES

REVISION TO STANDARD SPECIFICATIONS AND STANDARD DRAWINGS

SECTION 509 - PORTLAND CEMENT CONCRETE PAVEMENT, PCCP, JOINT REPAIR (PROPOSED NEW)
SECTION 901 - PCC MATERIALS
901.01(d) Rapid Hardening Hydraulic Cement

509.08 PCCP Removal

PCCP removal areas for partial depth repairs will be determined by sounding and will be marked. The Contractor shall remove all concrete to the limits shown on the plans or as directed by the Engineer. A machine configured to safely and consistently mill the necessary profile as detailed on the plans shall be provided. The teeth on the milling head shall be spaced at either 1/2 in. or 5/8 in. The milling machine shall be subject to approval by the Engineer prior to the start of milling operations. Whenever possible, the rotating axis of the milling head shall operate perpendicular to the joint being repaired. Should PCCP removal be confined to one side of a joint, the milling machine shall be controlled so as to not cause damage to the adjacent pavement.

Unless otherwise approved by the Engineer, areas that are less than 1 sq ft shall be removed by saw cutting and chipping. The saw cutting shall be to a depth of 2 in. within the marked area. Overlapping saw cuts at the outer perimeter of the repair shall not extend more than 2 in. beyond the intersection. Removal of the concrete within the limits of the saw cuts shall be by hand chipping tools or handheld mechanically driven equipment. Mechanical hammers may be used to remove the concrete inside the area delineated by the saw cuts, but shall not be heavier than a nominal 35 lb. class. Mechanically driven tools shall be operated at a maximum angle of 45° from the PCCP surface. A jack hammer with a wide chisel bit shall be used at a distance of 2 in. from the saw cut to remove the vertical edge and create a taper similar to the milling operations.

Removal areas within jointed reinforced concrete pavement, JRCP, are not required to utilize milling to initiate partial depth repairs. Saw cutting and hand chipping may be used as described above. Any wire mesh reinforcement exposed during the removal operations shall be removed.

PCCP removal areas shall not remain open overnight unless otherwise approved by the Engineer. Shoulders or adjacent PCCP damaged during the removal operations shall be repaired as directed.

Milling, or sawing and hand chipping, is allowed for transverse joint repairs that intersect a longitudinal joint that has already undergone partial depth joint repair. Removal areas along a longitudinal joint shall not disturb a transverse joint that has already undergone partial joint repair in accordance with this specification. Prior to any transverse joint repair that intersects a previous longitudinal repair, the existing partial depth repair along the longitudinal joint shall have achieved at least 12 h of curing, a passing soundness inspection, and adequate strength, as defined in 509.17. If there is no need for the transverse joint repair to completely cross the longitudinal joint, milling operations along the transverse joint shall stop short of the longitudinal joint so as not to cause damage beyond the longitudinal joint. Sawing and hand chipping shall be used to complete the removal process up to the longitudinal joint.

FINAL DRAFT MINUTES

Longitudinal joint repairs shall be terminated 12 in. or more from a transverse joint.

The Engineer will check milled surfaces after PCCP removal to identify any unsound concrete that remains. Limits of the removal area will be identified by sounding with a rock hammer. Areas of unsound concrete will be marked and shall be removed with a chipping hammer. Removal of unsound concrete below the elevation of the tops of dowel bars or tie bars is not intended and unsound concrete shall remain in place in these areas. For transverse joints, any voids or significant surface irregularities resulting from the hand chipping operations that extend below the elevation of the top of the dowel bars shall be filled using hand placed clean sand to make a uniform, level, bedding material to support the joint filler. For longitudinal joints, void space below the elevation of the top of tie bars shall be filled with repair concrete.

Dowel bars shall not be damaged during the removal of unsound concrete. At locations where a transverse joint meets the edge of pavement, or where joints intersect, the Engineer will determine if the concrete is deteriorated for the entire depth, within the limits detailed on the plans for bottom–half joint repair. If either end of a dowel bar is exposed or misaligned in a bottom-half joint repair, the exposed portion shall be removed or cut flush with the concrete surface, as directed by the Engineer.

If the combination of removal for partial depth joint repair and bottom-half joint repair exposes more than two adjacent dowels at a contraction joint, the Engineer shall be notified to determine if full depth patching is to be conducted in accordance with 506.07(b).

If a snowplowable raised pavement marker is to be installed in an area of partial depth joint repair, the width of the removal area, in proximity to where the RPM is to be installed, may be increased in order to provide the necessary clearances as specified in 509.16.

509.09 Surface Preparation and Joint Filler Installation

The milled or hand chipped cavities shall be prepared to provide a clean, irregular surface for the development of a good bond between the joint repair concrete and the existing pavement. Broken concrete pieces shall be removed and the cavities shall be swept clean. The surface of the cavity shall be thoroughly sandblasted and cleaned with compressed air to remove all dust and chips. Cleaning with compressed air shall be performed as close to placing the concrete as possible, but not after installing any joint filler. If joint filler material has been installed, the surface may be cleaned again by using compressed air at low pressure so as to not damage the in-place filler or sand below the top of any exposed dowel bar just prior to placing the grout or concrete. The air lines for sandblasting and compressed air cleaning shall be equipped with oil traps to prevent contamination of the surfaces.

FINAL DRAFT MINUTES

REVISION TO STANDARD SPECIFICATIONS AND STANDARD DRAWINGS

SECTION 509 - PORTLAND CEMENT CONCRETE PAVEMENT, PCCP, JOINT REPAIR (PROPOSED NEW)
SECTION 901 - PCC MATERIALS
901.01(d) Rapid Hardening Hydraulic Cement

(a) Joint Filler - General

The installation of joint filler is required before concrete placement and shall be of a width that matches the existing transverse or longitudinal joint being repaired or a minimum width of 3/8 in, whichever is greater. The joint filler shall extend at least 3 in. beyond the length of the patch area. Joint filler shall be installed as one piece for the depth of the repair. Splicing long lengths of joint filler may be allowed. The method of splicing shall be subject to approval by the Engineer.

(b) Joint Filler at Transverse Joints and Bottom Half Repairs

Use of joint filler is required for establishing compression relief at all existing transverse D-1 contraction joints and along both the longitudinal and transverse joint sides of a bottom-half repair. The joint filler shall not only re-establish the joint within the repair but shall also prevent the infiltration of the concrete into and across the crack or joint. Prior to placement of the joint filler at a transverse contraction joint, the joint shall be tooled or widened sufficiently at the bottom of the repair to create a slot so that the joint filler can be inserted a minimum of 1/4 in. below the bottom of the repair concrete. The base of the slot shall not extend below the elevation of the top of any exposed dowel bar. Joint filler shall be cut or trimmed to match the irregularities of the concrete at the bottom of the slot. Duct tape shall be placed as a bond breaker on exposed dowel bars. Any void space that exists below the top of exposed dowels shall be filled with clean No. 23 natural sand that is sufficiently dry to flow into the gap.

(c) Longitudinal Joints

Joint repairs at longitudinal joints shall utilize either a joint filler to re-establish the joint or perform both of the following:

1. *Tool the plastic repair concrete after placement to create a weak plane at the original joint location. The joint tooling equipment shall be identified in the QCP and approved by the Engineer prior to use. Tooling of the joint may be eliminated if the concrete used in the patch has been verified by the Engineer as meeting the shrinkage requirements stated in 509.04.*

2. *Saw the joint after the repair concrete has adequately hardened. Sawing of the tooled joint shall be performed with a 1/4 in. blade. Sawing shall be done with care as soon as possible without causing excessive raveling of the repair material. The depth of the saw cut shall extend below the full depth of the repair by at least 1/4 in., but no closer than 1 in. above the tie bar. If it is determined that a crack forms at the bottom of the tooled joint before sawing can be performed without raveling, sawing to re-establish the joint shall not be performed.*

FINAL DRAFT MINUTES

Areas designated by the Engineer as requiring bottom-half joint repair shall be prepared as shown on the plans. The reinforcing bars shall be installed in accordance with 503.03(g).

509.10 Concrete Mixing and Transportation

For onsite weighing and batching of OPCC or RHCC, the appropriate number of pre-packaged bags of cement, shall be at the mixing site to accommodate the day's production. The fine and coarse aggregate shall be pre-weighed to within 2% of their target for the batch size and placed in appropriate containers. Each aggregate component for a batch shall be identified as to material and weight, to facilitate accurate batching into the mixer in the proper sequence. Water, air entraining agent, and chemical admixtures, if appropriate, shall be at the mixing site. The water necessary to provide the required slump shall be measured by weight or volume and recorded for each batch. All components of cement, aggregates, water, air entraining agent, and any organic retarder shall be charged into a paddle type mixer according to the sequence defined in the QCP and mixed for a minimum of five minutes. The location of mixing shall be on the job site in close proximity to the joint repair operations.

Pre-packaged concrete, CPM 3U18, and an air entraining admixture, may be used instead of batching individual components. Pre-packaged concrete, CPM 3U58, shall not be modified with admixtures.

A pre-packaged RSP material containing coarse aggregate may be used. Addition of water and mixing shall be in accordance with the manufacturer's instructions.

Wash water shall not be used as a portion of the mixing water for any joint repair concrete.

LMC and LMC-VE shall be mixed in a mobile type volumetric mixer meeting the requirements of 722.09(a). The Engineer may also allow batching and mixing of OPCC or RHCC in a mobile-type volumetric mixer except the mixer shall carry sufficient quantities of unmixed ingredients to produce at least 2 cu yds and is not required to be self-propelled. Calibration of the mixer shall be in accordance with 722.13.

509.11 Weather Limitations

Joint repair concrete that has been placed shall be protected from rain. Materials described in the QCP for protection of the edges and surface of the repair area shall be readily available for use. Should any damage result, the Engineer will suspend operations until corrective action as described in the QCP is taken.

Joint repair concrete shall not be placed when either the ambient temperature or existing concrete pavement temperature is less than 50°F.

FINAL DRAFT MINUTES

Temperature restrictions for chemical anchor systems used in anchoring deformed steel reinforcement for bottom half repairs shall be in accordance with the manufacturer's recommendations.

509.12 Placing and Finishing Concrete

CPM, OPCC, and RSP repair concrete shall be placed within 15 minutes of mixing. RHCC, LMC, and LMC-VE shall be placed within five minutes of mixing. All repair concrete shall be placed such that a cold joint does not occur within the limits of an individual, or intersecting, longitudinal or transverse joint repair. Placement may be isolated to one side of a joint if the joint face or joint filler is properly supported. Repair along a transverse joint that intersects a previously repaired longitudinal joint is allowed as described in 509.08.

For CPM and OPCC material, the cleaned surface shall be lightly sprayed with water to wet the surface without ponding and a bonding grout shall be applied to the prepared surface. The grout shall consist of two parts Type I or Type II portland cement and one part sand mixed with sufficient water to form a slurry that can be spread evenly onto the prepared concrete surface. The grout shall be mixed mechanically and applied by brushing or scrubbing, with a stiff bristle broom, onto the prepared and wetted concrete surface. The pot life of the grout shall not extend beyond 1 h. CPM or OPCC repair material shall be placed immediately after applying the bonding grout.

For RHCC, LMC, and LMC-VE, thoroughly soak the cleaned surface and maintain it in a wet condition for at least 2 h immediately prior to placing the repair concrete. Maintaining a wet surface shall be accomplished by covering the soaked surface with wet burlap. The burlap shall be re-wetted as necessary. A layer of white opaque polyethylene film, that is at least 4 mils thick, may be used to offset the need to rewet the burlap. Prior to placing the joint repair material, the burlap shall be removed. Any standing water in depressions, holes, or areas of concrete removal shall be blown out with compressed air or other type of blower sufficient for removal, or by the use of an approved vacuum system. The surface shall be damp at time of placing the repair concrete. Bonding grout shall not be used.

For RSP material, the cleaned surface shall be lightly sprayed with water to thoroughly wet the surface without ponding. RSP repair material shall be placed immediately after wetting the surface. Bonding grout shall not be used.

When using a bonding grout, if the material dries or whitens prior to placing the concrete joint repair material, the repair material shall not be placed. The dried grout shall be thoroughly removed by sandblasting and cleaning as specified in 509.09.

Concrete for partial depth joint repair shall be placed monolithically with concrete for bottom-half joint repair, using the same concrete mixture. Concrete shall be consolidated by internal vibration and struck off level to the adjacent PCCP. Joint filler

FINAL DRAFT MINUTES

shall remain straight for the length of the repair, within a tolerance of ± 1/4 in. Concrete shall be hand finished and shall be controlled so that excess mortar and water is not worked into the surface. Final hand finishing shall have the trowels or floats work the surface from the joint toward the edge of the patch to avoid tearing the new concrete away from the existing pavement. Edging is required for fresh concrete adjacent to all joint filler or forms. Concrete repairs at transverse joints shall not protrude into an HMA shoulder by more than 3/8 in. by forming or sawing the edges. The concrete surface of the partial depth joint repair shall be textured by brooming in the longitudinal direction of the repair. All repairs shall be broom textured regardless of subsequent surface treatments.

The final finished surface of the repair shall not vary more than 1/8 in. from the existing pavement surface as measured with a straight edge over the joint. Partial depth patches that are not smooth shall be corrected by diamond grinding. Such grinding shall be completed after the concrete has gained sufficient strength for opening to traffic.

Immediately upon completion of finishing and texturing of the partial depth joint repair for all material types including CPM, OPCC, RHCC, LMC, LMC-VE, and RSP, grout shall be applied with a brush to the entire perimeter of the repair. Proportioning and mixing of the grout shall be the same as previously described in this section for bonding of CPM and OPCC material.

509.13 Curing

A resin-based liquid membrane forming compound in accordance with 912.01(e)2 shall be applied as soon as possible after the bleed water has dissipated. The compound shall be agitated in the shipping container to obtain a homogenous mixture for transfer to the job site application equipment. Application of curing compound shall be in accordance with the following:

(a) Rate of application shall be at least one gallon per 200 sq ft of surface curing area.

(b) Curing compound shall be applied to provide a uniform, solid, white opaque coverage on all exposed concrete surfaces similar to a white sheet of paper.

(c) If the applied curing compound is damaged by rain or other means during the curing period, the damaged area shall be repaired as soon as possible by re-application at a rate equal to the original coat.

(d) If the Engineer determines that the initial, or corrective re-application, results in unsatisfactory curing, the Engineer may prohibit the use of curing compound and instead require the use of wet double burlap or waterproof covers in accordance with 504.04.

FINAL DRAFT MINUTES

Whenever weather conditions exist that cause unusual or adverse placing and finishing conditions or equipment failures occur, the application of curing materials shall be expedited, or the mixing and placing operations shall be temporarily suspended as the conditions require.

~~Failure to comply with the above curing provisions will result in a monetary deduction of 100% of the unit bid price for the areas of partial depth joint repair in question. In lieu of a monetary deduction, the repair may be removed and replaced at no cost to the Department.~~When a deficiency is identified in the curing process, the joint repair shall be removed and replaced. If the repair is removed exposing an underlying bottom-half repair, the bottom-half repair shall also be removed and replaced.

509.14 Job Control

Control of concrete for slump, air content, or relative yield, as appropriate for the mix, and strength based on modulus of rupture obtained from flexural strength beams or compressive cylinders will be determined on the basis of tests performed by the Engineer in accordance with 505. The labor necessary for concrete sampling shall be furnished as required by the Engineer. Testing for slump, air content, and relative yield as appropriate for the mix, will be on the first batch of the day and a minimum of once per every 400 cu ft thereafter. Beams or cylinders will be made for evaluating the quality of the delivered mix at least once for every three days of production or whenever slump, relative yield, or air content are failing the upper limit. The beams or cylinders will be tested for compliance with strength requirements, at an age consistent with the mixtures intended use as defined in 509.04. Beams or cylinders for this purpose ~~will~~shall be cured in accordance with Section 10.1 of AASHTO T23 and 505.01(a).

The Engineer will notify the Contractor when measurements for slump, unit weight, air content, or modulus of rupture are outside of the specified requirements. Rounding will be in accordance with 109.01(a).

509.15 Joint Sealing

Joint openings within a repair area shall be maintained for the full depth of the joint repair concrete as described in sections 509.09 and 509.12. Longitudinal and transverse joints shall be sawed to create a reservoir for the sealant, to be followed by cleaning and sealing. If the longitudinal joint was re-established by sawing in accordance with 509.09(c)2, additional sawing to create a reservoir for the sealant is not required. If the longitudinal joint was not sawed due to cracking in accordance with 509.09(c)2, the reservoir for the sealant shall be sawcut to a maximum depth of 7/8 in. The cleaning and sealing of the joint shall be in accordance with 507.04(a) and as follows. Transverse and longitudinal joints shall be sealed with hot pour joint sealant in accordance with the sealant manufacturer's recommendations. Joints shall be sealed with joint sealing materials within 1/4 in. below the surface and shall extend beyond the limits of the patch to any existing sealant that is to remain in place. A distributor in accordance with 409.03

FINAL DRAFT MINUTES

shall be used with an indirect-heat, double boiler kettle and mechanical agitator. The hot poured joint sealant shall be placed utilizing a "V" shaped wand tip to allow the penetration of the material into the joints.

Any grinding to correct smoothness of partial depth patches shall be completed prior to joint sealing.

509.16 Snowplowable Raised Pavement Markers

Snowplowable raised pavement markers, RPM, shall be located and installed in accordance with 808.11, except that the marker shall be installed a minimum of 2 in. from the longitudinal joint. If the marker is installed within the limits of the partial depth patch, the slot shall be at least 2 in. from the edge of the repair. The repair material shall have attained a modulus of rupture of 500 psi or greater from flexural strength testing or 4,000 psi from compressive testing, prior to creating the slot for the adhesive and RPM. The slot may be created by grinding or by saw cutting and hand chipping. Each RPM installation will be inspected for proper installation. There shall be no visual cracks at the surface of the partial depth patch and the installation will be sounded to detect any loss of bond between the partial depth patch material and the substrate PCCP. Any such defect shall require repair of the partial depth patch and reinstallation of the RPM to the satisfaction of the Engineer, which may involve removal and replacement of the partial depth patch along the longitudinal joint between the limits of the transverse contraction joints. Any such repairs shall be made at no additional cost to the Department.

509.17 Opening to Traffic

Opening to traffic strength will be based on the modulus of rupture from one flexural strength test or the average of two cylinders. Cylinders will be either 6 in. by 12 in. or 4 in. by 8 in. Completed partial depth repairs and bottom-half repairs may be opened to traffic when flexural strength tests indicate a minimum modulus of rupture of 500 psi or when compressive strength tests indicate a minimum of 3,200 psi based on the average of the two individual cylinder breaks. Beams or cylinders for this purpose will be cast from repair concrete placed near the very end of each day's production for each different CMDP used and cured in accordance with Section 10.2 of AASHTO T23 and 505.01(a).

Prior to opening to traffic, the Contractor and Engineer will conduct an inspection of the partial depth patches to determine if there are any failures. Failures will include, but are not limited to, debonding of the repair concrete or random surface cracks. Repair of the failed partial depth joint repair or bottom-half joint repair shall be completed by an approved method prior to opening the pavement to non-construction traffic.

509.18 Method of Measurement

Partial depth joint repair will be measured at the surface, by the square foot, using linear dimensions measured to the nearest 0.1 ft.

FINAL DRAFT MINUTES

Bottom-half joint repair will be measured by the square foot using linear dimensions measured to the nearest 0.1 ft at the mid-depth of the pavement, when the following conditions are met:

(a) The PCCP is removed full depth to visibly expose the subbase below.

(b) The minimum number of reinforcing bars are furnished and installed as shown on the plans.

If the above requirements for bottom-half repairs are not met, the Engineer will only take measurements for payment under partial depth joint repair regardless of depth of the repair.

Additional removal width to accommodate the Contractor's equipment will not be measured.

For repairs at intersecting joints, the same area of joint repair will not be measured twice.

Sawing and sealing of joints in areas of partial depth joint repair will not be measured.

509.19 Basis of Payment

Partial depth joint repair and bottom-half joint repair will be paid for at the contract unit price per square foot. Measured areas of partial depth joint repair that are not located at a joint or crack will be paid as partial depth joint repair.

Payment will be made under:

Pay Item	***Pay Unit Symbol***
Joint Repair, Partial Depth	*SFT*
Joint Repair, Bottom-half	*SFT*

The cost of the trial batch for each concrete mixture, removing and disposing of the in-place concrete pavement as marked by the Engineer, tapering the edges of the repair back at 30 to 60 degrees, cleaning, sandblasting and air blasting, treatment of dowel bars, furnishing and installing bonding grout, furnishing and installing joint filler or tooling and sawing to re-establish the joint within or along the repair, furnishing and placing the concrete within the repair, vibrating, screeding, finishing, texturing, placing cement slurry around the edges, curing and protecting the concrete, sawing and sealing to re-establishing joints, cleanup, and any other materials, labor, equipment, or incidentals

FINAL DRAFT MINUTES

REVISION TO STANDARD SPECIFICATIONS AND STANDARD DRAWINGS

SECTION 509 - PORTLAND CEMENT CONCRETE PAVEMENT, PCCP, JOINT REPAIR (PROPOSED NEW)
SECTION 901 - PCC MATERIALS
901.01(d) Rapid Hardening Hydraulic Cement

necessary to complete the work as specified shall be included in the cost of the joint repair, partial depth pay item.

The cost of removal and disposal of the in-place concrete pavement as determined by the Engineer, cleaning sandblasting and air blasting, treatment of dowel bars, furnishing and installing steel reinforcement, furnishing and installing bonding grout, furnishing and installing joint filler and sawing to re-establish the joint within or along the repair, furnishing, placing, and vibrating the concrete within the repair, sawing and sealing to re-establishing joints, cleanup, and any other materials, labor, equipment, or incidentals necessary to complete the work as specified shall be included in the cost of the joint repair, bottom-half pay item.

Areas of removal for PCCP Joint Repair, which after inspection by the Engineer, are determined to need PCCP Patching, Full Depth in accordance with 506.07(b), will be paid at 40% of the contract unit price per sq ft for the work represented for both Joint Repair, Partial Depth and Joint Repair, Bottom-half. PCCP Patching, Full Depth will be paid at 100% of the contract unit price.

During periods of overnight lane closure, if the Engineer inspects an area of joint repair and determines that PCCP Patching, Full Depth in accordance with 506.07(b) is necessary, the joint repair may be completed if needed to meet the opening to traffic requirement. If completed in order to meet the opening to traffic requirement, the joint repair will be paid at 100% of the contract unit price.

~~Repair~~ Joint repair areas that do not meet the curing requirements of 509.13 ~~will have a monetary deduction of 100% of the unit bid price. If the deficient areas are removed and replaced, no deduction will be applied~~shall be removed and replaced at no additional cost to the Department.

Additional removal width to accommodate the Contractor's equipment shall be at no additional cost to the Department.

Removal and replacement of partial depth patches and snowplowable raised pavement markers as described in 509.16 for debonding and other defects shall be at no additional cost to the Department.

FINAL DRAFT MINUTES

REVISION TO STANDARD SPECIFICATIONS AND STANDARD DRAWINGS

SECTION 509 - PORTLAND CEMENT CONCRETE PAVEMENT, PCCP, JOINT REPAIR (PROPOSED NEW)
SECTION 901 - PCC MATERIALS
901.01(d) Rapid Hardening Hydraulic Cement

SECTION 901, AFTER LINE 157, INSERT AS FOLLOWS:

(d) Rapid Hardening Hydraulic Cement

Rapid hardening hydraulic cement shall be calcium sulfoaluminate, CSA, cement furnished from a manufacturer or manufacturer/distributor on the Department's list of Cement Sources. A source may be added to the approved list by completing the requirements of ITM 806, Procedure U.

FINAL DRAFT MINUTES

REVISION TO STANDARD SPECIFICATIONS AND STANDARD DRAWINGS

E 509-CCJR-01 JOINT REPAIR INDEX AND GENERAL NOTES (proposed new)

INDEX

SHEET NO.	SUBJECT
1	Joint Repair Index and General Notes
2	Longitudinal Joint Repair, Partial Depth
3	Transverse Joint Repair, Partial Depth
4	Joint Repair, Bottom-Half

GENERAL NOTES:

1. Tie-bars shall be epoxy coated.
2. Remove top 2 in. of unsound concrete by milling (typical) or by chipping hammer. Any wire mesh exposed during JRCP repairs shall be completely removed.
3. Remove unsound concrete below milling depth by chipping hammer.
4. Chipping hammers shall not be heavier than a nominal 35 lb class.
5. Surfaces of all repairs shall be properly cleaned and prepared prior to placing concrete.

INDIANA DEPARTMENT OF TRANSPORTATION

JOINT REPAIR
INDEX AND GENERAL NOTES

SEPTEMBER 2021

STANDARD DRAWING NO. E 509-CCJR-01

DESIGN STANDARDS ENGINEER DATE

CHIEF ENGINEER DATE

REVISION TO STANDARD SPECIFICATIONS AND STANDARD DRAWINGS

E 509-CCJR-02 LONGITUDINAL JOINT REPAIR, PARTIAL DEPTH (proposed new)

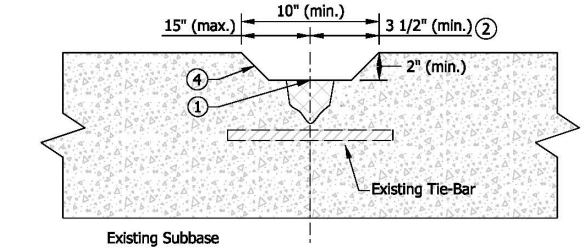

REMOVAL DETAIL STRADDLING JOINT WITHOUT EXPOSED TIE-BAR

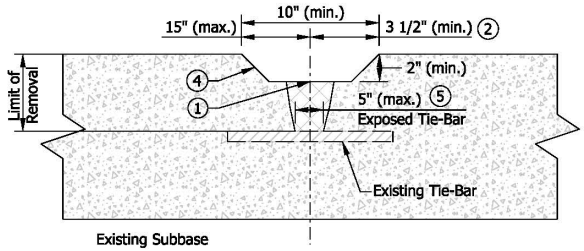

REMOVAL DETAIL STRADDLING JOINT WITH EXPOSED TIE-BAR

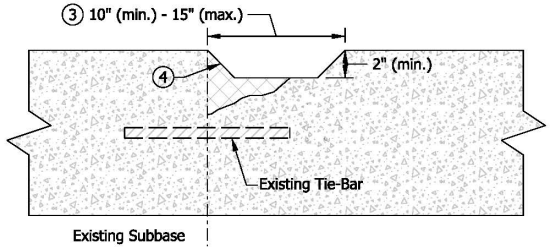

REMOVAL DETAIL ADJACENT TO JOINT WITHOUT EXPOSED TIE-BAR

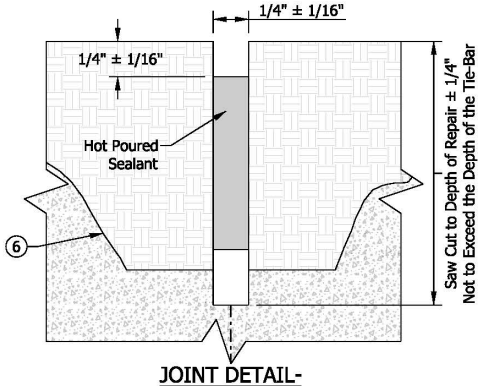

JOINT DETAIL- SAW CUT OPTION

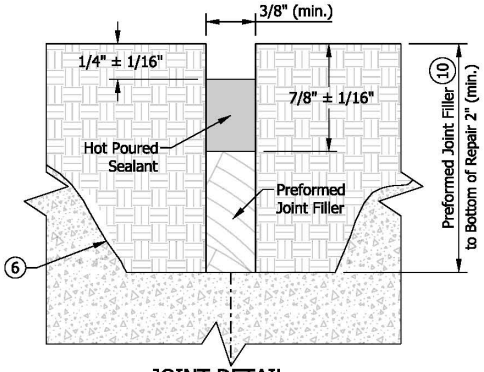

JOINT DETAIL- PREFORMED JOINT FILLER OPTION
(Final Configuration)

NOTES:

1. Joint shall be reestablished by either preformed joint filler or saw cut option with tooling.
2. Repairs that involve both sides of the joint shall have at least 3 1/2 in. of milling width on both sides of the joint. The overall milling width shall be at least 10 in.
3. Repairs that only involve one side of the joint shall have at least 10 in. of milling width, as measured from the joint, and shall not disturb the concrete in the adjacent slab.
4. Sides of repair shall be tapered 30° - 60° from vertical.
5. Full depth patching shall be used where the width of unsound concrete at the depth of the tie-bar exceeds 5 in.
6. 2 in. minimum milling shown, additional hand chipping may be required to remove unsound concrete.
7. Existing tie-bars exposed after removal shall be removed to the face of existing concrete. For tie-bar tolerance, see Standard Drawing Series E 503-CCPJ.
8. Any voids resulting from hand chipping that extend below the tie-bars may be filled with repair concrete. Removal of the unsound concrete below the elevation of the tie-bars is not intended.
9. Repairs shall be terminated 12 in. or more from a transverse joint.
10. Preformed Joint Filler initially installed to top of repair. A portion shall be sawed out to create reservoir for hot pour sealant.

LEGEND

Unsound Concrete
New Concrete
Exisiting Concrete

INDIANA DEPARTMENT OF TRANSPORTATION

LONGITUDINAL JOINT REPAIR, PARTIAL DEPTH

SEPTEMBER 2021

STANDARD DRAWING NO. E 509-CCJR-02

DESIGN STANDARDS ENGINEER DATE

CHIEF ENGINEER DATE

REVISION TO STANDARD SPECIFICATIONS AND STANDARD DRAWINGS

E 509-CCJR-03 TRANSVERSE JOINT REPAIR, PARTIAL DEPTH (proposed new)

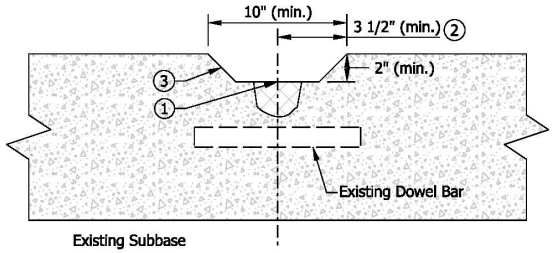

REMOVAL DETAIL WITHOUT EXPOSED DOWEL BAR STRADDLING JOINT

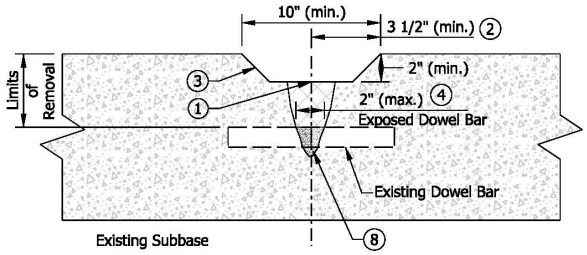

REMOVAL DETAIL WITH EXPOSED DOWEL BAR STRADDLING JOINT

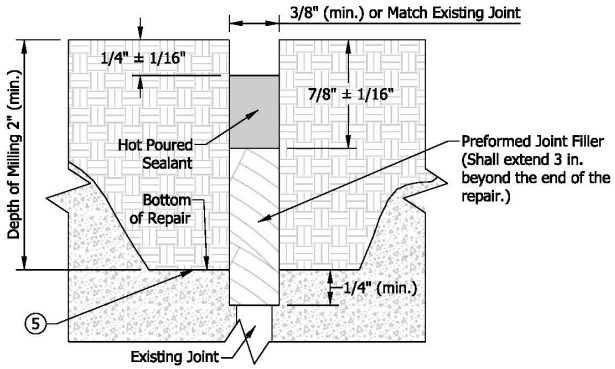

JOINT REPAIR DETAILS
(showing repair straddling joint)

NOTES:

1. Joints shall be reestablished by installing 3/8 in. preformed joint filler prior to concrete placement.
2. Repairs that involve both sides of the joint shall have at least 3 1/2 in. of milling width on both sides of the joint. The overall milling width shall be at least 10 in.
3. Sides of repair shall be tapered 30° - 60° from vertical.
4. Full depth patching shall be used where the width of unsound concrete at the depth of the tie-bar exceeds 2 in.
5. 2 in. minimum milling shown, additional hand chipping may be required to remove unsound concrete.
6. Existing dowel bars exposed after removal that are either misaligned or severely corroded shall be removed to the face of existing concrete. For dowel bar tolerance, see Standard Drawing Series E 503-CCPJ.
7. Exposed areas of dowel bars shall be covered with duct tape as a bond breaker.
8. Any voids resulting from hand chipping that extend below the elevation of the top of the dowel bars shall be filled with dry clean sand. Removal of the unsound concrete below the elevation of the top of the dowel bars is not intended.
9. Joint repairs shall not terminate within a wheel path. Where existing deterioration exists within a wheel path, the limits of the repair should extend to the edge or center of the lane.

LEGEND

Sand
New Concrete
Unsound Concrete
Exisiting Concrete

INDIANA DEPARTMENT OF TRANSPORTATION

TRANSVERSE JOINT REPAIR, PARTIAL DEPTH

SEPTEMBER 2021

STANDARD DRAWING NO. E 509-CCJR-03

DESIGN STANDARDS ENGINEER DATE

CHIEF ENGINEER DATE

REVISION TO STANDARD SPECIFICATIONS AND STANDARD DRAWINGS

E 509-CCJR-04 JOINT REPAIR, BOTTOM-HALF (proposed new)

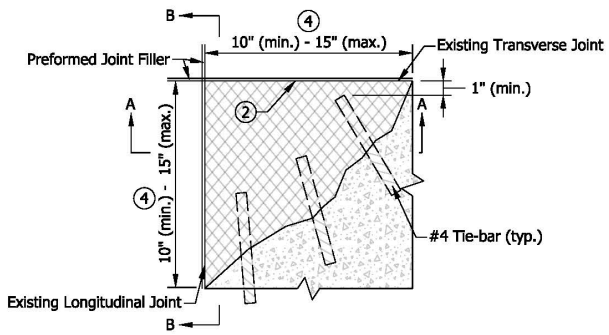

CORNER SLAB REPAIR - PLAN VIEW

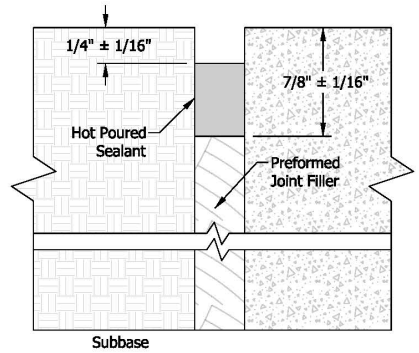

SECTION B-B
(showing repaired concrete)

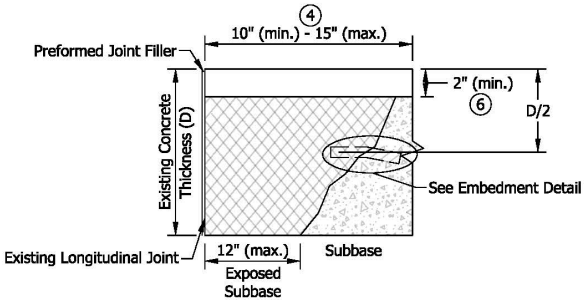

SECTION A-A
(showing concrete removal)

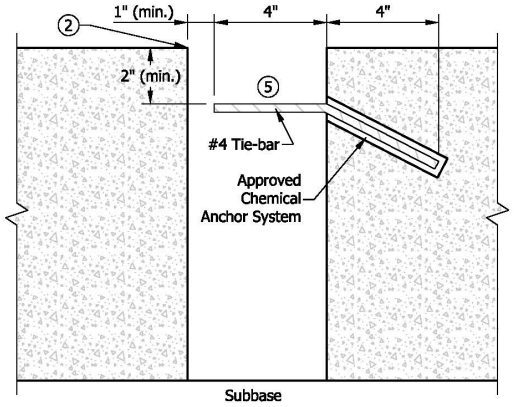

EMBEDMENT DETAIL

NOTES:

1. #4 tie-bars shall be installed at 6 in. spacing, center to center while maintaining a minimum 2 in. of cover and 1 in. of clearance from the vertical sides of the joint.

(2) Joints shall be reestablished by installing full depth preformed expansion joint filler to match the existing transverse joint prior to concrete placement.

3. Area for joint repair, bottom-half will be measured at D/2.

(4) 15 in. maximum or as approved by the Engineer.

(5) #4 tie-bars may be installed at an angle to clear the adjacent existing concrete, but shall be field bent horizontal prior to installation.

(6) Pay limits for partial depth joint repair.

LEGEND

New Concrete
Unsound Concrete
Exisiting Concrete

INDIANA DEPARTMENT OF TRANSPORTATION

JOINT REPAIR,
BOTTOM-HALF

SEPTEMBER 2021

STANDARD DRAWING NO. E 509-CCJR-04

DESIGN STANDARDS ENGINEER DATE

CHIEF ENGINEER DATE

COMMENTS AND ACTION

SECTION 509 - PORTLAND CEMENT CONCRETE PAVEMENT, PCCP, JOINT REPAIR (PROPOSED NEW)
901.01(d) Rapid Hardening Hydraulic Cement
E 509-CCJR-01 thru 4 JOINT REPAIR (proposed new)

DISCUSSION:

Mr. Reilman introduced and presented this item stating that a better method for the repair of joints in concrete pavement is needed. Existing methods have involved the removal of deteriorated concrete at the joints and replacement with hot mix asphalt which is not a good long-term repair. In some situations, repair of the joints involved removal of entire slabs which is excessive and not ideal.

Mr. Reilman explained that, beginning in 2017, INDOT developed a new methodology for the repair of concrete joints. The repairs are isolated near the joints and in the top half of the slabs. Deteriorated concrete is replaced with cementitious repair materials that are a better suited match for the existing PCCP and provide the best opportunity for success of long-term repairs. Mr. Reilman therefore proposed to incorporate the new 509 specification section as shown above.

Mr. Koch asked about the language in 509.05 and if the Contractor is required to make and cure the trial batch beams and cylinders? Mr. Nelson agreed and the language has been revised as shown.

Mr. Koch also asked if the QCP language should appear prior to the trial batch language. Mr. Nelson concurred and 509.06 QCP has been moved in front of 509.05 Trial Batch, as shown.

Mr. Koch inquired of the language regarding the “failure to comply” language shown in 509.13 and 509.19 sections, stating that we cannot leave the potential problems in place. Mr. Nelson agreed and the agreed upon revisions are as shown highlighted above.

Minor revisions are as shown resulting from other brief discussions. Further discussion ensued concerning drawing details involving the removal details.

Further discussion ensued as to the language revisions shown and clarification was provided by Mr. Reilman.

Mr. Reilman revised his motion, which was seconded by Mr. Koch, and this item passed as revised.

FINAL DRAFT MINUTES

COMMENTS AND ACTION

SECTION 509 - PORTLAND CEMENT CONCRETE PAVEMENT, PCCP, JOINT REPAIR (PROPOSED NEW)
901.01(d) Rapid Hardening Hydraulic Cement
E 509-CCJR-01 thru 4 JOINT REPAIR (proposed new)

[continued]

Motion: Mr. Reilman Second: Mr. Dave Ayes: 9 Nays: 0 FHWA Approval: YES	Action:	
	___	Passed as Submitted
	X	Passed as Revised
	___	Withdrawn
Standard Specifications Sections referenced and/or affected: Proposed new 509; 901 pg 912 (proposed new bulleted list).	X	2022 Standard Specifications
	___	Revise Pay Items List
Recurring Special Provision references in: NONE	X	Create RSP (No. 509-R-xxx) Effective: June 1, 2021 RSP Sunset Date: 2022 SS book
Standard Drawing affected: PROPOSED NEW	___	Revise RSP (No.___) Effective: RSP Sunset Date:
Design Manual Sections affected: NONE	___	Standard Drawing Effective:
GIFE Sections cross-references: NONE	X	Create RPD (No. 509-R-xxxd) Effective: June 1, 2021 RPD Sunset Date: August 31, 2021
	X	GIFE Update
	___	SiteManager Update

FINAL DRAFT MINUTES

PROPOSAL TO STANDARDS COMMITTEE

PROBLEM(S) ENCOUNTERED:
Section 507.05(b) contains an antiquated method for repairing joints in concrete pavement. Beginning in 2017 INDOT developed a new methodology for the repair of concrete joints. This is a highly detailed method and is being incorporated into a new 509 specification. Therefore, section 507.05(b) that involves joints and PCCP restoration needs to reference the new method in 509.

PROPOSED SOLUTION:
Remove the current language in 507.05(b) and reference the new 509 specification.

APPLICABLE STANDARD SPECIFICATIONS: 507.05

APPLICABLE STANDARD DRAWINGS: none

APPLICABLE DESIGN MANUAL SECTION: none

APPLICABLE SECTION OF GIFE: none

APPLICABLE RECURRING SPECIAL PROVISIONS:

PAY ITEMS AFFECTED: none

APPLICABLE SUB-COMMITTEE ENDORSEMENT: ad hoc group: Jim Reilman, Michael Nelson, Tony Zander, Nick Cosenza

IMPACT ANALYSIS (attach report): yes

Submitted By: Jim Reilman

Title: State Materials Engineer

Organization: INDOT Division of Materials and Tests

Phone Number: 317-522-9692

Date: 11-23-20

FINAL DRAFT MINUTES

IMPACT ANALYSIS REPORT CHECKLIST

Explain the business case as to why this item should be presented to the Standards Committee for approval. Answer the following questions with Yes, No or N/A.

Does this item appear in any other specification sections? Yes, new 509

Will approval of this item affect the Approved Materials List? No

Will this proposal improve:

Construction costs? N/A

Construction time? N/A

Customer satisfaction? N/A

Congestion/travel time? N/A

Ride quality? N/A

Will this proposal reduce operational costs or maintenance effort? No

Will this item improve safety:

For motorists? N/A

For construction workers? N/A

Will this proposal improve quality for:

Construction procedures/processes? Yes

Asset preservation? Yes

Design process? N/A

Will this change provide the contractor more flexibility? No

Will this proposal provide clarification for the Contractor and field personnel? Yes

Can this item improve/reduce the number of potential change orders? No

Is this proposal needed for compliance with:

Federal or State regulations? No

AASHTO or other design code? No

Is this item editorial? No

Provide any further information as to why this proposal should be placed on the Standards Committee meeting Agenda: N/A

FINAL DRAFT MINUTES

REVISION TO STANDARD SPECIFICATIONS

SECTION 507 - PCCP RESTORATION
507.05 PCCP Patching
507.09 Method of Measurement
507.10 Basis of Payment

(Note: Proposed changes shown highlighted gray)

The Standard Specifications are revised as follows:

SECTION 507, BEGIN LINE 100, DELETE AND INSERT AS FOLLOWS:

507.05 PCCP Patching

(a) Full Depth *and Partial Depth* Patching

PCCP patching shall be in accordance with 506.

(b) ~~Partial Depth Patching~~*Joint Repair*

~~Partial depth patching shall be constructed at locations shown on the plans. Existing joints directed to be patched partial depth, shall be milled to a depth of 3 in. the full width of the lane. The minimum length of milling is 6 in. beyond the map-cracked area. The milled area shall be cleaned of all loose material prior to patching. Cleaning shall be by blowing the milled areas with compressed air at a minimum pressure of 100 psi. When the milled areas are satisfactorily cleaned, the milled areas shall be tacked with asphalt material in accordance with 406 and patched with HMA.~~

~~The milled areas shall be filled with HMA partial depth patching. Partial depth patches shall consist of HMA Surface, type B in accordance with 402.04. MAF in accordance with 402.05 will not apply. The mixture shall be compacted by a vibratory roller in accordance with 409.03(d). A minimum of four passes of the rollers shall be completed. Partial depth patches shall be completed during work hours and opened to traffic at the close of the workday. Mixtures will be accepted in accordance with 402.09.~~*PCCP joint repair shall be in accordance with 509.*

SECTION 507, BEGIN LINE 169, DELETE AND INSERT AS FOLLOWS:

507.09 Method of Measurement

Routing and sealing of cracks, filling of cracks, sawing and sealing of joints, and filling of joints will be measured by the linear foot, complete in place. Retrofit load transfer will be measured by each dowel bar assembly installed, complete in place. PCCP patching will be measured in accordance with 506.12. *PCCP joint repair will be measured in accordance with 509.18.* Profiling, regardless of depth, will be measured by the square yard. Asphalt material and drilled holes for undersealing will be measured in accordance with 612.07.

~~HMA partial depth patching will be measured by the ton, in accordance with 109.01(b).~~

Construction activities for the cutting, cleaning of the PCCP, dowel bars, dowel bar supports, dowel bar end caps, foam core board, patching material and all other incidentals will not be measured.

FINAL DRAFT MINUTES

Routing of cracks or sawing of joints will not be measured. Routing and sealing of transverse random cracks at retrofitted load transfer assemblies will not be measured.

Temporary traffic control measures for routing, sealing or filling of cracks or sawing, sealing, or filling of joints, and profiling will be measured in accordance with 801.17.

507.10 Basis of Payment

Routing and sealing of cracks, filling of cracks, sawing and sealing of joints and filling of joints will be paid for by the linear foot, complete in place. The accepted quantities of retrofit load transfer will be paid for at the contract unit price per each assembly installed, comp*l*ete in place. PCCP patching will be paid for in accordance with 506.13. *PCCP joint repair will be paid for in accordance with 509.19.* Profiling will be paid for by the square yard. Undersealing and drilled holes will be paid for in accordance with 612.08. ~~The accepted quantities for HMA partial depth patching will be paid for at the contract unit price per ton, complete in place.~~

The cost of temporary traffic control measures for routing, sealing or filling of cracks or joints, and profiling will be paid for in accordance with 801.18.

Payment will be made under:

Pay Item	**Pay Unit Symbol**
Cracks in PCCP, Filled	LFT
Cracks in PCCP, Rout and Seal	LFT
~~HMA Partial Depth Patch~~	~~TON~~
Joints in PCCP, Filled	LFT
Joints in PCCP, Saw and Seal	LFT
Profiling PCCP	SYS
Retrofit Load Transfer	EACH

The cost of milling, cleaning, tacking, and all incidentals shall be included in the cost of the pay item, partial depth patching.

The cost of cutting of slots, cleaning, dowel bars, dowel bar supports, dowel bar end caps, foam board, mortar, and curing materials shall be included in the cost of the pay item retrofit load transfer.

The cost of cleaning, sealing materials, and all incidentals shall be included in the cost of the pay item cracks in PCCP, filled or joints in PCCP, filled.

FINAL DRAFT MINUTES

REVISION TO STANDARD SPECIFICATIONS

SECTION 507 - PCCP RESTORATION
507.05 PCCP Patching
507.09 Method of Measurement
507.10 Basis of Payment

The cost of routing, cleaning, sealant materials, and all incidentals shall be included in the cost of the pay item cracks in PCCP, rout and seal. The cost of sawing, cleaning, sealant materials, and all incidentals shall be included in the cost of the pay item joints in PCCP, saw and seal.

The cost of all grinding, diamond cutting heads, and cleaning of the pavement, shall be included in the cost of the pay item for profiling.

FINAL DRAFT MINUTES

COMMENTS AND ACTION

507.05 PCCP Patching
507.09 Method of Measurement
507.10 Basis of Payment

DISCUSSION:

Mr. Reilman introduced and presented this item stating that specification section 507.05(b) contains an antiquated method for repairing joints in concrete pavement. Beginning in 2017, INDOT developed a new methodology for the repair of concrete joints. This is a highly detailed method and is being incorporated into the new 509 specification section. Therefore, 507.05(b) that involves joints and PCCP restoration needs to reference the new method in 509.

Mr. Reilman proposed to remove the current language in 507.05(b) and reference the new 509 specification.

Mr. Koch asked if the references to patching or joint repair within 507 even necessary since 507 is a miscellaneous section. We already have 506 and 509, once passed, and all the references to patching just refer to those sections. Could we delete 507.05 and references within the method of measurement and basis of payment? Mr. Reilman stated that they proposed it that way in order to make it clear that concrete patching and joint repair are covered elsewhere. This might be redundant, but it would be clear. And although not opposed to Mr. Koch's suggestion, Mr. Reilman mentioned that other edits to 507 may also be necessary. Mr. Novak agreed depending on Pavement's position on whether 509 will replace in all cases the option provided in 507 as a treatment for PCCP joints.

With no further discussion, it was agreed to make this a RSP with a Basis for Use requiring that this RSP will accompany the new RSP for 509 approved earlier in this meeting.

Motion: Mr. Reilman Second: Mr. Koch Ayes: 9 Nays: 0 FHWA Approval: YES	Action: _X_ ___ ___	 Passed as Submitted Passed as Revised Withdrawn
Standard Specifications Sections referenced and/or affected: 507 begin pg 436. Recurring Special Provision references in: NONE Standard Drawing affected: NONE Design Manual Sections affected: NONE GIFE Sections cross-references: NONE	_X_ ___ _X_ ___ ___ ___ ___ ___	2022 Standard Specifications Revise Pay Items List Create RSP (No.507-R-xxx) Effective: June 1, 2021 RSP Sunset Date: 2022 SS book Revise RSP (No.___) Effective: RSP Sunset Date: Standard Drawing Effective: Create RPD (No. ___) Effective: GIFE Update SiteManager Update

FINAL DRAFT MINUTES

PROPOSAL TO STANDARDS COMMITTEE

PROBLEM(S) ENCOUNTERED:
Epoxy coated steel is currently secured with uncoated tie wire which is a practice that is not recommended by JTRP research conducted by INDOT or any industry groups including the American Concrete Institute (ACI), The Epoxy Interest Group of CRSI (Concrete Reinforcing Steel Institute) and the Iron Workers Union. INDOT also has concerns regarding how well reinforcing steel is currently being secured for reinforced concrete bridge approach slabs and bridge decks. If the reinforcing steel is not tied sufficiently, bars can be displaced during the pour. Loose reinforcing steel also makes it generally more difficult for laborers to walk on the steel creating a potential safety hazard.

PROPOSED SOLUTION:
Modify section 703.06 to require that all epoxy coated reinforcing steel be secured with epoxy-coated or plastic-coated tie wire. The upper mat of reinforcing steel in reinforced concrete bridge approach slabs and bridge decks will be required to be tied at 100% of the intersections of the longitudinal and transverse steel and the lower mat will be tied at a minimum of 50% of the intersections of the longitudinal and transverse steel.

APPLICABLE STANDARD SPECIFICATIONS: 703.06

APPLICABLE STANDARD DRAWINGS: none

APPLICABLE DESIGN MANUAL SECTION: none

APPLICABLE SECTION OF GIFE: none

APPLICABLE RECURRING SPECIAL PROVISIONS:

PAY ITEMS AFFECTED: none

APPLICABLE SUB-COMMITTEE ENDORSEMENT: INDOT Steering committee - 11/13/20

IMPACT ANALYSIS (attach report):

Submitted By: Jim Reilman

Title: State Materials Engineer

Organization: INDOT Division of Materials and Tests

Phone Number: 317-522-9692

Date: 11-23-20

FINAL DRAFT MINUTES

IMPACT ANALYSIS REPORT CHECKLIST

Explain the business case as to why this item should be presented to the Standards Committee for approval. Answer the following questions with Yes, No or N/A.

Does this item appear in any other specification sections? No

Will approval of this item affect the Approved Materials List? No

Will this proposal improve:

Construction costs? N/A

Construction time? N/A

Customer satisfaction? N/A

Congestion/travel time? N/A

Ride quality? N/A

Will this proposal reduce operational costs or maintenance effort? No

Will this item improve safety:

For motorists? N/A

For construction workers? Yes

Will this proposal improve quality for:

Construction procedures/processes? Yes

Asset preservation? Yes

Design process? N/A

Will this change provide the contractor more flexibility? No

Will this proposal provide clarification for the Contractor and field personnel? No

Can this item improve/reduce the number of potential change orders? No

Is this proposal needed for compliance with:

Federal or State regulations? No

AASHTO or other design code? No

Is this item editorial? No

Provide any further information as to why this proposal should be placed on the Standards Committee meeting Agenda: N/A

FINAL DRAFT MINUTES

REVISION TO STANDARD SPECIFICATIONS

SECTION 703 - REINFORCING BARS
703.06 Placing and Fastening

(Note: Proposed changes shown highlighted gray)

The Standard Specifications are revised as follows:

SECTION 703 BEGIN LINE 57, DELETE AND INSERT AS FOLLOWS:

All dimensions shown on the plans for spacing of reinforcing bars apply to centers of bars unless otherwise noted. All bars shall be accurately placed and, during placing of the concrete, held firmly in the position as shown on the plans. Distances from the forms shall be maintained by means of chairs, ties, hangers, or other approved support devices. All reinforcing bars shall be wired rigidly or fastened securely at sufficient intervals to hold the bars in place. *Epoxy coated reinforcing bars shall be tied with epoxy coated or plastic coated tie wire.* Chairs and supports holding upper layers of reinforcing bars shall support the transverse bars. The upper layer of reinforcing bars in *RCBAs and* bridge floors shall be tied or fastened at ~~such intervals as *100 %*necessary~~*a minimum of every other* ~~*of the*~~ *intersection*~~*s*~~ *of the longitudinal and transverse bars and the lower layer of reinforcing bars in RCBAs and bridge floors shall be tied or fastened at a minimum of* ~~*50% of the*~~*every other intersection*~~*s*~~ *of the longitudinal and transverse bars* to prevent an upward or a lateral movement of a bar from the planned position.

FINAL DRAFT MINUTES

COMMENTS AND ACTION

703.06 Placing and Fastening

DISCUSSION:

This item was introduced and presented by Mr. Reilman who explained that epoxy coated steel is currently secured with uncoated tie wire which is a practice that is not recommended by JTRP research, conducted by INDOT, or any industry groups including the American Concrete Institute, ACI, the Epoxy Interest Group of CRSI, Concrete Reinforcing Steel Institute, and the Iron Workers Union. INDOT also has concerns regarding how well reinforcing steel is currently being secured for reinforced concrete bridge approach slabs and bridge decks. If the reinforcing steel is not tied sufficiently, bars can be displaced during the pour. Loose reinforcing steel also makes it generally more difficult for laborers to walk on the steel creating a potential safety hazard.

Mr. Reilman proposed to modify 703.06 to require that all epoxy coated reinforcing steel be secured with epoxy-coated or plastic-coated tie wire. The upper mat of reinforcing steel in reinforced concrete bridge approach slabs and bridge decks will be required to be tied at 100% of the intersections of the longitudinal and transverse steel and the lower mat will be tied at a minimum of 50% of the intersections of the longitudinal and transverse steel.

Mr. Duncan, FHWA, mentioned that it may be difficult to get a tight fit with the coated wire. Mr. Nelson stated that the coated wire has changed over time, but is also one of the reasons for requiring more coverage.

Mr. Greg Allen, from industry, believes that 100% may be excessive. By placing the ties every 4 ft, which is the industry standard, seems to be sufficient. Adding more ties does not add any value and increases the time needed to complete the work.

Mr. Osborn, from ICI, stated that he has received feedback from several bridge contractors and reinforcing steel subcontractors. Industry reports that safety has not been an issue. I have asked that our ICI Safety Director research past reports of incidents caused by or associated with inadequate tied bridge deck rebar.

Mr. Osborn stated that the added time for this requirement will be one to two weeks for our typical deck area range. The cost would depend on area and spacing, and we can expect from $0.11 to 0.35 per pound increase.
As for the quality, we understand the desire to keep the steel in place. The first question that our folks asked me "did INDOT present this revision to address data presented showing a significant volume of or pattern of increased displacement?" I responded that I was not made aware. If there is such data, it would be good to share with our joint bridge subcommittee. I think the industry subcommittee members are willing to work with INDOT to solve this type of issue.
Several members from industry responded that 50% of the top mat would be more than sufficient based on past experience of higher specified or needed frequency. They also realize, that with use of special concrete distribution equipment, a higher tie frequency may be required for those situations.

Mr. Koch cited examples of other states successfully utilizing this practice. Other states require tying all intersections.

Mr. Dan McCoy, from industry, stated that they see a 30 to 35 % tie rate that seems to work rather well, and that 50% provides a good hold. Mr. McCoy stated that 100% is too much, and that 50% tie rate provides better stability and safety.

Following much discussion, the agreed upon revisions are as shown highlighted above.

Mr. Reilman revised his motion, Mr. Dave seconded, and this item passed as revised.

FINAL DRAFT MINUTES

COMMENTS AND ACTION

703.06 Placing and Fastening

[continued]

Motion: Mr. Reilman Second: Mr. Koch Ayes: 9 Nays: 0 FHWA Approval: YES	Action: ___ Passed as Submitted _X_ Passed as Revised ___ Withdrawn
Standard Specifications Sections referenced and/or affected: 703.06 pg 609. Recurring Special Provision references in: NONE Standard Drawing affected: NONE Design Manual Sections affected: NONE GIFE Sections cross-references: NONE	___ 2022 Standard Specifications ___ Revise Pay Items List _X_ Create RSP (No.703-R-xxx) Effective: June 1, 2021 RSP Sunset Date: ___ Revise RSP (No.___) Effective: RSP Sunset Date: ___ Standard Drawing Effective: ___ Create RPD (No. ___) Effective: ___ GIFE Update ___ SiteManager Update

FINAL DRAFT MINUTES

PROPOSAL TO STANDARDS COMMITTEE

PROBLEM(S) ENCOUNTERED: Standard Drawing E 724-BSSJ-08 shows a sliding cover plate detail that is used to the bridge the gap between type SS expansion joint extrusions when the joint is located in a sidewalk. The slide plate is 3/8 in. thick and a recess of the same thickness is formed in the sidewalk adjacent to the slide plate. Current ADA requirements limit vertical changes to 1/4 in., and changes up to 1/2 in. need to include a bevel with a 2h:1v or flatter slope.

PROPOSED SOLUTION: The sliding cover plate detail will be revised to include a 2h:1v bevel on the leading edge of the steel sliding plate, and the recess will be transitioned at a slope flatter than 2h:1v.

APPLICABLE STANDARD SPECIFICATIONS: Section 724 (no changes required)

APPLICABLE STANDARD DRAWINGS: E 724-BSSJ-08

APPLICABLE DESIGN MANUAL SECTION: Chapter 404 – Bridge Deck (no changes required)

APPLICABLE SECTION OF GIFE: 5.20 Expansion Joints, Section 2 – ADA Compliance (no changes required)

APPLICABLE RECURRING SPECIAL PROVISIONS: N/A

PAY ITEMS AFFECTED: N/A

APPLICABLE SUB-COMMITTEE ENDORSEMENT: Ad hoc committee including Katherine Smutzer, Elizabeth Phillips, and Stephanie Wagner.

IF APPROVED AS RECURRING SPECIAL PROVISION OR PLAN DETAILS, PROPOSED BASIS FOR USE: Contract containing 724 pay items.

IMPACT ANALYSIS (attach report):

Submitted By: Pete White for Mark Orton

Title: Standards Engineer

Organization: INDOT Standards and Policy

Phone Number: 317-233-3840
Date: Nov. 23, 2020

FINAL DRAFT MINUTES

IMPACT ANALYSIS REPORT CHECKLIST

Explain the business case as to why this item should be presented to the Standards Committee for approval. Answer the following questions with Yes, No or N/A.

Does this item appear in any other specification sections? No
Will approval of this item affect the Approved Materials List? No
Will this proposal improve:

Construction costs? No

Construction time? No

Customer satisfaction? Yes

Congestion/travel time? No

Ride quality? No

Will this proposal reduce operational costs or maintenance effort? No

Will this item improve safety:

For motorists? No

For construction workers? No

Will this proposal improve quality for:

Construction procedures/processes? No

Asset preservation? No

Design process? Yes

Will this change provide the contractor more flexibility? No

Will this proposal provide clarification for the Contractor and field personnel? Yes

Can this item improve/reduce the number of potential change orders? Yes

Is this proposal needed for compliance with:

Federal or State regulations? Yes

AASHTO or other design code? No

Is this item editorial? No

Provide any further information as to why this proposal should be placed on the Standards Committee meeting Agenda: This change is required for the Standard Drawing to be in compliance with ADA requirements.

FINAL DRAFT MINUTES

REVISION TO STANDARD DRAWINGS

E 724-BSSJ-08 EXPANSION JOINTS CLASS SS (WITH MARKUPS)

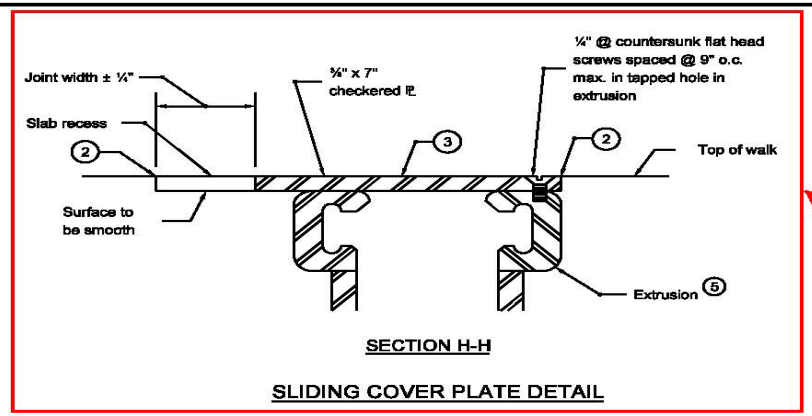

The current detail shows the 3/8" thick slide plate and the 3/8" deep recess with square edges. Current ADA requirements indicate that the maximum allowable vertical height difference is 1/4", and larger height differences should be transitioned at a 2h:1v slope. Therefore, the slide plate detail will be updated.

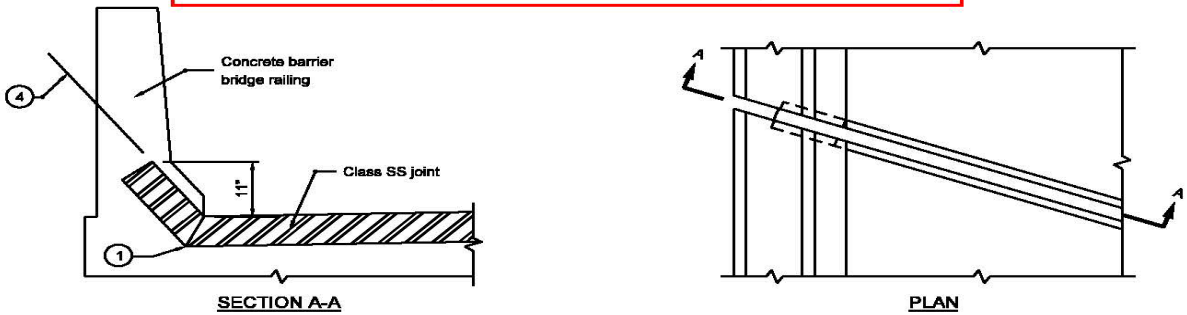

CONCRETE BARRIER BRIDGE RAILING

1. The extrusion and plate assemblies with anchors shall be miter cut and shop spliced at this location. A miter cut, vulcanized shop splice will be required in the strip seal at this location.
2. Tool concrete edges to ¼" to ⅜" radius. ← Note no longer applies and will be deleted.
3. The length of the sliding cover plate, measured along the centerline of the Class SS Joint, shall be ¾" shorter at each end than the limits of the recess as shown on these details.
4. The joint shall be placed parallel to the lower sloped face of the rail with a maximum 3 " depth to the top of the extrusion.
5. See Standard Drawings E 724-BSSJ-03 and -04 for details. ← Reference is out of date and will be deleted.

INDIANA DEPARTMENT OF TRANSPORTATION
EXPANSION JOINTS
CLASS SS
SEPTEMBER 2003
STANDARD DRAWING NO. E 724-BSSJ-08

RICHARD L. VANCLEAVE REGISTERED No. 9750 STATE OF INDIANA PROFESSIONAL ENGINEER
DESIGN STANDARDS ENGINEER

/s/ Richard L. VanCleave — DESIGN STANDARDS ENGINEER — 9-02-03 DATE
/s/ Richard K. Sauinger — CHIEF HIGHWAY ENGINEER — 9-02-03 DATE

REVISION TO STANDARD DRAWINGS

E 724-BSSJ-08 EXPANSION JOINTS CLASS SS (PROPOSED DRAFT)

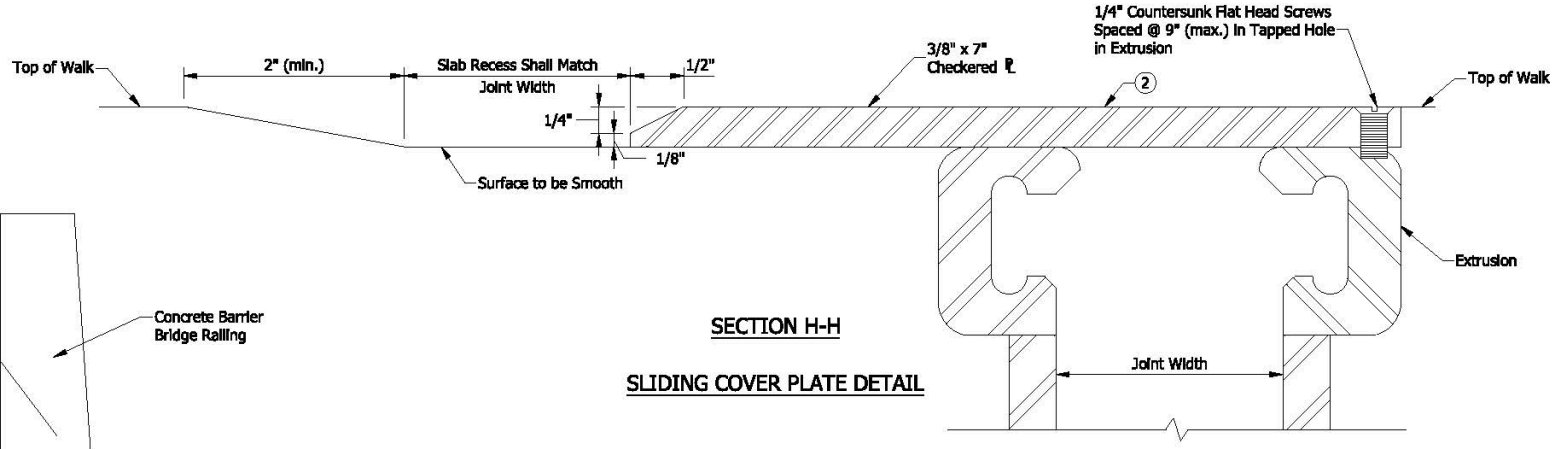

SECTION H-H

SLIDING COVER PLATE DETAIL

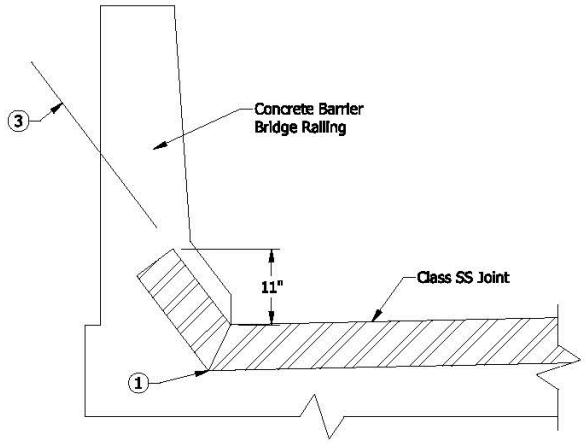

SECTION A-A

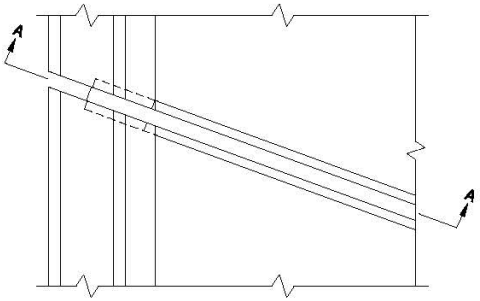

CONCRETE BARRIER BRIDGE RAILING

NOTES:

1. The extrusion and plate assemblies with anchors shall be miter cut and shop spliced at this location. A miter cut, vulcanized shop splice will be required in the strip seal ath this location.
2. The lenght of the sliding cover plate, measured along the centerline of the Class SS Joint, shall be 3/8" shorter at each end than the limits of the recess as shown on these details.
3. The joint shall be placed parallel to the lower sloped face of the rail with a maximum 3" depth to the top of the extrusion.

INDIANA DEPARTMENT OF TRANSPORTATION	
EXPANSION JOINTS CLASS SS SEPTEMBER 2021	
STANDARD DRAWING NO. E 724-BSSJ-08	
	DESIGN STANDARDS ENGINEER DATE CHIEF ENGINEER DATE

COMMENTS AND ACTION

E 724-BSSJ-08 EXPANSION JOINTS CLASS SS

DISCUSSION:

This item was introduced and presented by Mr. White, sitting in for Mr. Orton, who stated that Standard Drawing E 724-BSSJ-08 shows a sliding cover plate detail that is used to bridge the gap between type SS expansion joint extrusions when the joint is located in a sidewalk. The slide plate is 3/8 in. thick and a recess of the same thickness is formed in the sidewalk adjacent to the slide plate. Current ADA requirements limit vertical changes to 1/4 in., and changes up to 1/2 in. need to include a bevel with a 2h:1v or flatter slope.

Mr. White proposed that the sliding cover plate detail will be revised to include a 2h:1v bevel on the leading edge of the steel sliding plate, and the recess will be transitioned at a slope flatter than 2h:1v, as illustrated above.

There was no further discussion and this item passed as submitted.

Motion: Mr. White Second: Mr. Boruff Ayes: 9 Nays: 0 FHWA Approval: YES	Action: _X_ Passed as Submitted ___ Passed as Revised ___ Withdrawn
Standard Specifications Sections referenced and/or affected: Section 724 (no changes required) Recurring Special Provision references in: NONE Standard Drawing affected: E 724-BSSJ-08 Design Manual Sections affected: Chapter 404 – Bridge Deck (no changes required) GIFE Sections cross-references: 5.20 Expansion Joints, Section 2 – ADA Compliance (no changes required)	___ 2022 Standard Specifications ___ Revise Pay Items List ___ Create RSP (No.___) Effective: RSP Sunset Date: ___ Revise RSP (No.___) Effective: RSP Sunset Date: _X_ Standard Drawing E 724-BSSJ Effective: September 1, 2021 ___ Create RPD (No. ___) Effective: ___ GIFE Update ___ SiteManager Update

FINAL DRAFT MINUTES

PROPOSAL TO STANDARDS COMMITTEE

PROBLEM(S) ENCOUNTERED: Pile sleeves have recently been used for all bridge piling that is installed within mechanically stabilized earth, MSE, embankment. Pile sleeves for this application are not currently covered by the Standard Specifications and rely on unique special provisions. This can lead to inconsistencies between projects and additional design and review time.

Concrete encasement for exposed H pile bents is currently included in the cost of reinforced concrete encased H pile, which is paid for by linear foot installed. The length of installed piling can vary significantly from the estimated lengths shown on the schedule of pay items. The limits of concrete encasement is shown on the plans and doesn't vary based on the amount of piling driven. Therefore, when the length of piling driven exceeds the estimated length, the State is essentially paying for more concrete encasement than is actually installed. When the length of piling driven is less than the estimated length, the Contractor is providing concrete encasement that wasn't included in their bid price.

PROPOSED SOLUTION: Pile sleeves for MSE embankment installations will be added to Standard Specification section 701.

The concrete encasement will be separated from the H piles for measurement and payment. This will allow for more consistent and equitable costs of the concrete encasement.

APPLICABLE STANDARD SPECIFICATIONS: 701

APPLICABLE STANDARD DRAWINGS: E 701-BPIL (no changes required)

APPLICABLE DESIGN MANUAL SECTION: 17-5.03(02), 402-6.02(02)3.d, 409-2.04(03), Fig. 409-2G

APPLICABLE SECTION OF GIFE: 5.7 Driven Piling (no changes required)

APPLICABLE RECURRING SPECIAL PROVISIONS: N/A

PAY ITEMS AFFECTED: 701-XXXXX Pile Sleeve, MSE, 701-02945 PILE, STEEL H, REINFORCED CONCRETE ENCASED, HP 12 X 74, 701-97805 PILE, STEEL H, REINFORCED CONCRETE ENCASED, HP 10 X 42, 701-97874 PILE, STEEL H, REINFORCED CONCRETE ENCASED, HP, 12 X 53, 701-XXXXX Reinforced Concrete Encasement for H Piles

APPLICABLE SUB-COMMITTEE ENDORSEMENT: Ad hoc committee including Mir Zaheer, Aamir Turk, Mahmoud Hailat, Jim Reilman, and Derrick Hauser.

FINAL DRAFT MINUTES

[CONTINUED]

IF APPROVED AS RECURRING SPECIAL PROVISION OR PLAN DETAILS, PROPOSED BASIS FOR USE:

IMPACT ANALYSIS (attach report):

Submitted By: Pete White for Mark Orton

Title: Standards Engineer

Organization: INDOT Standards and Policy

Phone Number: 317-233-3840

Date: Nov. 23, 2020

FINAL DRAFT MINUTES

IMPACT ANALYSIS REPORT CHECKLIST

Explain the business case as to why this item should be presented to the Standards Committee for approval. Answer the following questions with Yes, No or N/A.

Does this item appear in any other specification sections? No
Will approval of this item affect the Approved Materials List? No
Will this proposal improve:

Construction costs? Yes

Construction time? No

Customer satisfaction? No

Congestion/travel time? No

Ride quality? No

Will this proposal reduce operational costs or maintenance effort? No
Will this item improve safety:

For motorists? No

For construction workers? No

Will this proposal improve quality for:

Construction procedures/processes? Yes

Asset preservation? No

Design process? Yes

Will this change provide the contractor more flexibility? No

Will this proposal provide clarification for the Contractor and field personnel? Yes

Can this item improve/reduce the number of potential change orders? Yes

Is this proposal needed for compliance with:

Federal or State regulations? No

AASHTO or other design code? No

Is this item editorial? No

Provide any further information as to why this proposal should be placed on the Standards Committee meeting Agenda: These changes will lead to more consistency in pile sleeves used in MSE embankment, and more equitable payment for concrete encasement for H piles.

FINAL DRAFT MINUTES

REVISION TO STANDARD SPECIFICATIONS

SECTION 701 - DRIVEN PILLING
701.02 Materials
701.09*(g) Pile Sleeves for MSE Walls*
701.14 Method of Measurement
701.15 Basis of Payment

(Note: Proposed changes shown highlighted gray)

The Standard Specifications are revised as follows:

SECTION 701, BEGIN LINE 3, INSERT AS FOLLOWS:

MATERIALS

701.02 Materials

Materials shall be in accordance with the following:

B Borrow 211
Bentonite Grout.....913.06
Concrete Piles 707
Conical Pile Tips.....915.01(a)2
End Plates .....915.01(a)1
Epoxy Coating for Piles.....915.01(d)
Pile Shoes 915.03
Pea Gravel, 93PG.....904.03(e)
Reinforcing Bars 910.01
Steel H Piles.....915.02
Steel Pipe Piles.....915.01
Structural Concrete.....702
Timber Piling, Treated .....911.02(c)
Timber Piling, Untreated.....911.01(e)

Unless otherwise specified, reinforcing bars may be either plain or epoxy coated.

Steel pipe piles shall consist of a steel pipe which is driven into place and filled with class A concrete.

The Contractor may furnish and drive steel pipe piles with thicker walls than specified.

Treated and untreated timber piles shall be strapped with at least three straps: one approximately 18 in. from the butt, one approximately 24 in. from the butt, and one approximately 12 in. from the tip. Additional straps shall be provided at approximately 15 ft centers between the butt and tip. Strapping shall encircle the pile once and be tensioned as tightly as possible. Straps shall be 1 1/4 in. wide, 0.031 in. thick, cold rolled, fully heat treated, high tensile strapping, painted and waxed, with breaking strength of 5,500 lbs. The strap shall encircle the pile once and shall be crimped with a notch type sealer to furnish a joint yielding 80% of the strap tensile strength. Treated timber piles shall be strapped after treatment.

FINAL DRAFT MINUTES

REVISION TO STANDARD SPECIFICATIONS

SECTION 701 - DRIVEN PILLING
701.02 Materials
701.09*(g) Pile Sleeves for MSE Walls*
701.14 Method of Measurement
701.15 Basis of Payment

Pile sleeves for MSE walls shall be 30 in. diameter, type 1 pipe in accordance with 715.02(a), with the exception that clay, aluminum and concrete pipe shall not be used. Pile sleeves shall be backfilled with pea gravel.

SECTION 701, AFTER LINE 754, INSERT AS FOLLOWS:

(g) Pile Sleeves for MSE Walls

Pile sleeves shall extend from the base of the excavation for the MSE wall vertically to an elevation 2 in. below the bottom of the bridge end bent. Pile sleeves shall be placed and sufficiently braced so that the sleeves remain within 2 in. of plan location after placing the backfill material. The annular space between the pile and the pile sleeve shall be backfilled with pea gravel. The top of the pile sleeve shall be sealed with polyethylene sheeting to prevent concrete and backfill from entering the annular space between the pile and the pile sleeve. The bottom of the bridge bent shall be isolated from the top of the pile sleeve by preformed expansion joint filler.

SECTION 701, BEGIN LINE 824, DELETE AND INSERT AS FOLLOWS:

701.14 Method of Measurement

The driven length of treated timber piles, untreated timber piles, steel pipe piles, steel H piles, and concrete piles will be measured by the linear foot to the nearest 0.1 ft. This includes piles used as indicator test piles, dynamic test piles, or static load test piles. Measurement will be made only for the actual number of linear feet of piling complete in place. For concrete piles, this length will not include extensions or the portion of the pile cutoff to make the extension.

Dynamic pile load test, static pile load test, indicator test pile restrike, dynamic test pile restrike, pile shoes, and conical pile tips will be measured per each.

Epoxy coated piles, prebored holes, and cored holes in rock will be measured by the linear foot complete in place of the diameter specified.

~~Concrete encasement, c~~*C*lass A concrete, reinforcing bars, epoxy coating, reaction piles if not used as production piles, splices, end plates, predrilling, cleaning of drilled holes, drilling fluids, sealing materials, casing, jetting, followers, spudding, or other methods used to facilitating pile driving will not be measured for payment.

Pile sleeves for MSE walls will be measured per each.

Reinforced concrete encasement for steel H piles will be measured by the linear foot as shown on the plan or as directed.

FINAL DRAFT - MINUTES

REVISION TO STANDARD SPECIFICATIONS

SECTION 701 - DRIVEN PILLING
701.02 Materials
701.09*(g) Pile Sleeves for MSE Walls*
701.14 Method of Measurement
701.15 Basis of Payment

701.15 Basis of Payment

All treated timber piles, untreated timber piles, steel pipe piles, steel H piles, and concrete piles driven will be paid for by the linear foot. Payment will be made only for the actual number of linear feet of piling complete in place. Extensions for concrete piles will be paid for in accordance with 109.05.

Driven piles used as indicator test piles or dynamic test piles that are left in place and subsequently used as production piles will be paid for by the linear foot as either production indicator test piles or production dynamic test piles. Reaction piles used in a static pile load test that are left in place and subsequently used as a production pile will be paid for by the linear foot as the type of production pile they represent. Driven piles used as indicator test piles, dynamic test piles, or static load test piles that are not used as production piles will be paid for by the linear foot as non-production dynamic, indicator, or static test piles respectively.

If the quantity of driven piling is less than the plan quantity or the quantity as ordered by the Engineer, the Department will pay 50% of the cost to re-stock unused piling if the Contractor elects to re-stock piling and provides a paid invoice showing the re-stocking fee. Payment will be made for piling, restock.

Epoxy coated piles may be furnished and driven at lengths greater than those shown on the plans. These additional lengths of epoxy coated piles left in place and accepted will be paid for as either steel pipe piles or steel H piles.

Prebored holes and cored holes in rock will be paid for at the contract price in linear feet.

Payment will be made under:

Pay Item	**Pay Unit Symbol**
Conical Pile Tip, _____ (pile size)	EACH
Cored Hole in Rock, _____ in. (diameter)	LFT
Dynamic Pile Load Test	EACH
Pile Shoe, _____ (pile size)	EACH
Pile Sleeve, MSE	*EACH*
Pile, Concrete _____ x _____ (size)	LFT

FINAL DRAFT MINUTES

REVISION TO STANDARD SPECIFICATIONS

SECTION 701 - DRIVEN PILLING
701.02 Materials
701.09*(g) Pile Sleeves for MSE Walls*
701.14 Method of Measurement
701.15 Basis of Payment

Pile, Prestressed Concrete _____ x _____ ..... LFT
size
Pile, Steel H, Epoxy Coated, HP _____ x _____ ..... LFT
size
Pile, Steel H, HP _____ x _____ ..... LFT
size
~~Pile, Steel H, Reinforced Concrete~~
~~Encased, HP _____ x _____ ..... LFT~~
~~size~~
Pile, Steel Pipe, _____, _____ ..... LFT
pipe wall thickness diameter
Pile, Steel Pipe, Epoxy Coated, _____, _____ ..... LFT
pipe wall thickness diameter
Pile, Timber ..... LFT
Pile, Timber, Treated ..... LFT
Piling, Restock ..... LS
Prebored Hole, _____ in. ..... LFT
diameter
Reinforced Concrete Encasement for H Piles ..... LFT
Static Pile Load Test, _____ ..... EACH
pile size
Test Pile, Dynamic, _____, Non-Production ..... LFT
pile size
Test Pile, Dynamic, Production ..... LFT
Test Pile, Dynamic, Restrike ..... EACH
Test Pile, Indicator, _____, Non-Production ..... LFT
pile size
Test Pile, Indicator, Production ..... LFT
Test Pile, Indicator, Restrike ..... EACH
Test Pile, Static Load, _____, Non-Production ..... LFT
pile size

All costs associated with the dynamic pile load test except the cost of the test pile and test pile restrike shall be included in the cost of the dynamic pile load test.

All costs associated with the static pile load test except the cost of the test pile shall be included in the cost of the static pile load test. The cost of reaction piles used in the static load test and not incorporated into the work as production piles shall be included in the cost of the static load test.

FINAL DRAFT MINUTES

REVISION TO STANDARD SPECIFICATIONS

SECTION 701 - DRIVEN PILLING
701.02 Materials
701.09*(g) Pile Sleeves for MSE Walls*
701.14 Method of Measurement
701.15 Basis of Payment

The cost of furnishing and placing concrete, B borrow, or bentonite grout necessary to fill pilot holes, and all necessary incidentals shall be included in the cost of the pay items of this section.

The cost of the following shall be included in the cost of the piling.

(a) predrilling pilot holes;
(b) pile sleeves *for predrilling*;
(c) maintaining open holes during pile driving;
(d) broken, bent, damaged, or misplaced piles;
(e) concrete filling ~~or concrete encasement~~;
(f) corrective location or alignment measures;
(g) epoxy coating;
(h) splicing piles and jetted sites;
(i) modifying or replacing pile driving equipment;
(j) redriving piles which have heaved more than 1/4 in.;
(k) plain and epoxy coated reinforcing bars;
(l) repairing epoxy coating;
(m) replacing epoxy coated piling;
(n) restriking production piles not shown as test piles;
(o) piles which are not acceptable or damaged during driving;
(p) piles which were not driven in accordance with these specifications;
(q) piles driven with the tops lower than the cutoff elevation;
(r) spudding or jetting of piles;
(s) end plates for pipe piles;
(t) all straps on treated and untreated timber piling; and
(u) all labor, equipment, and necessary incidentals.

No additional payment will be made if the Contractor elects to furnish and drive thicker walled pipe piles than specified.

An increase in the size of a pile cap to satisfy edge distance clearance requirements, when approved, shall be at no additional cost to the Department.

If the method for driving the piles is specified as 701.05(b) and the contract is a local public agency contract, the Contractor shall include the cost of acquiring the PDA consultant in the cost of the Dynamic Pile Load Test.

The cost of mobilization and demobilization for pile driving operations shall be included in the cost of mobilization and demobilization in accordance with 110.04.

FINAL DRAFT MINUTES

REVISION TO STANDARD SPECIFICATIONS

SECTION 701 - DRIVEN PILLING
701.02 Materials
701.09*(g) Pile Sleeves for MSE Walls*
701.14 Method of Measurement
701.15 Basis of Payment

The cost to control sediment in water from jetting operations shall be included in the cost of the piling.

The cost of pile sleeves for MSE walls, maintaining pile sleeve placement during construction of MSE walls, backfilling pile sleeves with pea gravel, sealing and isolating the top of the pile sleeves and all incidental materials and work necessary shall be included in the cost of the pile sleeve, MSE.

The cost of forms, falsework, class A concrete, reinforcing bars, and necessary incidentals shall be included in the cost of reinforced concrete encasement for H piles.

FINAL DRAFT MINUTES

COMMENTS AND ACTION

701.02 Materials
701.09*(g) Pile Sleeves for MSE Walls*
701.14 Method of Measurement
701.15 Basis of Payment

DISCUSSION:

Mr. White, sitting in as proxy for Mr. Orton, introduced and presented this item explaining that pile sleeves have recently been used for all bridge piling that is installed within mechanically stabilized earth, MSE, embankment. Pile sleeves for this application are not currently covered by the Standard Specifications and rely on unique special provisions. This can lead to inconsistencies between projects and additional design and review time.

Mr. White further explained that concrete encasement for exposed H pile bents is currently included in the cost of reinforced concrete encased H pile, which is paid for by linear foot installed. The length of installed piling can vary significantly from the estimated lengths shown on the schedule of pay items. The limits of concrete encasement is shown on the plans and doesn't vary based on the amount of piling driven. Therefore, when the length of piling driven exceeds the estimated length, the State is essentially paying for more concrete encasement than is actually installed. When the length of piling driven is less than the estimated length, the Contractor is providing concrete encasement that wasn't included in their bid price.

Mr. White proposed that language for pile sleeves for MSE embankment installations be added to 701 as shown above. The concrete encasement will be separated from the H piles for measurement and payment, allowing for more consistent and equitable costs of the concrete encasement.

Detailed discussions prior to the meeting are as follows:
Mr. Koch asked if any MSE designers or Contractors have expressed any concern with 30 in., plus wall thickness, sleeves due to strap splay angle, requirement less than 15%? Due the footprint, should smooth wall PVC or any smooth wall thermoplastic pipe be required to electrically isolate the pile, sleeves, and straps?
Mr. Turk, from Geotech, replied that the distance between pile sleeve and back of the wall panel should be 3 ft for all piles so the diameter of the sleeves may not make much difference. Mr. Turk said he also has not heard about the need for electrically isolating the pile, and assumed Mr. Koch is concerned about accelerated corrosion. That is usually a concern when the MSE Wall is close to an electrically operated Train.

Mr. White agreed that the pile sleeves will result in more conflicts between the MSE straps and the pile components, and is glad Mr. Koch brought up this point because it's easy to keep moving down a path and lose sight of the goal. The primary reason why we want to start using pile sleeves on all bridges built behind MSE retaining walls is to reduce the horizontal force imposed on the wall panels that results from thermal contraction of integral end bents. The other way we could accomplish this goal would be to use semi-integral end bents. Unless there are downdrag concerns, I think these concerns will all but disappear under our new design approach, I don't think we would need pile sleeves if we used semi-integral end bents. Mr. White asked if Contractors and ICI would be willing to give us some feedback on this topic. It could be that the additional cost of semi-integral end bents versus integral end bents is nearly the same premium as the pile sleeves. Mr. White further state that, on a related note, I've often wondered why we don't see structural frames used to orient MSE straps around piles. It doesn't seem like this would be overly costly or difficult to construct, and is already covered in AASHTO.

Mr. Koch stated that on a similar project, the high skews resulted in very complicated strap design with the 2016 SS including open language for splay angles, ground reinforcement shall be placed normal to the face of the wall unless otherwise shown on the plans. The MSE Designer included a plan note for the 15 degree splay for straps that were not already designed with a greater angle. I too am surprised why the MSE wall designers do not require framing but I am sure that is an additional cost. For this reason I favor the elegance of a simple design wherever possible. Mr. Kock also mentioned that if pile sleeves are required, and considering the amount of spaghetti within some designs, isolating the straps and pile should eliminate the possibility of galvanic corrosion, hence the plastic sleeve comment. The MSE wall designer required a 3 in. separation.

FINAL DRAFT MINUTES

COMMENTS AND ACTION

701.02 Materials
701.09*(g) Pile Sleeves for MSE Walls*
701.14 Method of Measurement
701.15 Basis of Payment

Mr. Turk stated that we need to discuss this at the next wall committee meeting to get the member input. The use of pile sleeves behind MSE Wall panels was in place before I start at INDOT Geotech. I think, the original reason for introducing the pile sleeves for piles within the reinforced zone was the down drag. Follow further discussion, Mr. Turk believes we will keep the pile sleeves. Mr. Koch concurred.

Mr. White shared some feedback he received from the Reinforced Earth Company, RECo, stating that they support Mr. Koch's concern that requiring pile sleeves is going to cause more challenges for strap placement. They're also questioning the need for pile sleeves at all, which might be a valid question now that downdrag loads might be less of an issue.

Mr. White moved to withdraw this item pending further review of the concerns addressed above, with the intention of bringing this back at the next standards committee meeting.

Motion: Second: Ayes: Nays: FHWA Approval:	Action: ___ Passed as Submitted ___ Passed as Revised _X_ Withdrawn
Standard Specifications Sections referenced and/or affected: 701 begin pg 555. Recurring Special Provision references in: NONE Standard Drawing affected: E 701-BPIL (no changes required) Design Manual Sections affected: 17-5.03(02), 402-6.02(02)3.d, 409-2.04(03), Fig. 409-2G GIFE Sections cross-references: 5.7 Driven Piling (no changes required)	___ 2022 Standard Specifications ___ Revise Pay Items List ___ Create RSP (No.____) Effective: _____ RSP Sunset Date: ___ Revise RSP (No.___) Effective: RSP Sunset Date: ___ Standard Drawing Effective: ___ Create RPD (No. ___) Effective: ___ GIFE Update ___ SiteManager Update

FINAL DRAFT MINUTES